C6D50065D1

6th Generation 650 V, 50 A Silicon Carbide Schottky Diode

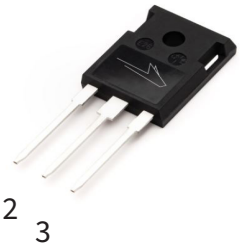

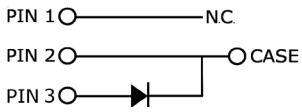

Package Types: TO-247-3
Marking: C6D50065D1

Description

With the performance advantages of a Silicon Carbide (SiC) Schottky Barrier diode, power electronics systems can expect to meet higher efficiency standards than Si-based solutions, while also reaching higher frequencies and power densities. SiC diodes can be easily paralleled to meet various application demands, without concern of thermal runaway. In combination with the reduced cooling requirements and improved thermal performance of SiC products, SiC diodes are able to provide lower overall system costs in a variety of diverse applications.

Features

- Low Forward Voltage (V_F) Drop with Positive Temperature Coefficient
- Zero Reverse Recovery Current / Forward Recovery Voltage
- Temperature-Independent Switching Behavior
- Low Leakage Current (I_R)

Typical Applications

- Industrial Power Supplies
- Battery Charging Systems
- Switch Mode Power Supplies
- Solar Inverters
- Server/Telecom Power Supplies

Maximum Ratings (T_C = 25°C Unless Otherwise Specified)

Parameter	Symbol	Value	Unit	Test Conditions	Notes
Repetitive Peak Reverse Voltage	V_{RRM}	650	V		
DC Blocking Voltage	V_{DC}	650			
Continuous Forward Current	I_F	136	A	T_C = 25 °C	Fig. 3
		69		T_C = 125 °C	
		43		T_C = 150 °C	
Repetitive Peak Forward Surge Current	I_{FRM}	166		T_C = 25 °C, t_p = 10 ms, Half Sine Wave	
		94		T_C = 110 °C, t_p = 10 ms, Half Sine Wave	
Non-Repetitive Forward Surge Current	I_{FSM}	303		T_C = 25 °C, t_p = 10 ms, Half Sine Wave	Fig. 8
		268		T_C = 110 °C, t_p = 10 ms, Half Sine Wave	
Non-Repetitive Peak Forward Surge Current	$I_{F,Max}$	1500		T_C = 25 °C, t_p = 10 µs, Pulse	
		1320		T_C = 110 °C, t_p = 10 µs, Pulse	
Power Dissipation	P_{tot}	349	W	T_C = 25 °C	Fig. 4
		151		T_C = 110 °C	
i^2t value	$\int i^2dt$	459	A^2s	T_C= 25C, tp=10ms	
		359		T_C = 110C, tp=10ms	

4600 Silicon Drive | Durham, NC 27703 | Tel: +1.919.313.5300 | wolfspeed.com/power
© 2024 Wolfspeed, Inc. All rights reserved. Wolfspeed® and the Wolfstreak logo are registered trademarks and the Wolfspeed logo is a trademark of Wolfspeed, Inc.
The information in this document is subject to change without notice.

Electrical Characteristics

Parameter	Symbol	Typ.	Max.	Unit	Test Conditions	Notes
Forward Voltage	V_F	1.30	1.5	V	I_F = 50 A, T_j = 25 °C	Fig. 1
		1.46	1.7		I_F = 50 A, T_j = 175 °C	
Reverse Current	I_R	6	100	µA	V_R = 650 V, T_j = 25 °C	Fig. 2
		65	400		V_R = 650 V, T_j = 175 °C	
Total Capacitive Charge	Q_C	158		nC	V_R = 400 V, T_j = 25 °C	Fig. 5
Total Capacitance	C	2819		pF	V_R = 0 V, T_j = 25 °C, f = 1 MHz	Fig. 6
		300			V_R = 200 V, T_j = 25 °C, f = 1 MHz	
		244			V_R = 400 V, T_j = 25 °C, f = 1 MHz	
Capacitance Stored Energy	E_c	24		µJ	V_R = 400 V	Fig. 7

Notes:
SiC Schottky Diodes are majority carrier devices, so there is no reverse recovery charge.

Thermal & Mechanical Characteristics

Parameter	Symbol	Value	Unit	Notes
Thermal Resistance, Junction to Case (Typical)	$R_{\theta, JC (TYP)}$	0.37	°C / W	Max: 0.43
Junction Temperature	T_j	-55 to +175	°C	
Case & Storage Temperature	T_c	-55 to +175		
TO-247 Mounting Torque	-	1	Nm	M3 Screw
		8.8	lbf-in	6-32 Screw

Electrostatic Discharge (ESD) Classifications

Parameter	Symbol	Notes
Human Body Model	HBM	Class 3B (≥ 8000 V)
Charge Device Model	CDM	Class C3 (≥ 1000 V)

© 2024 Wolfspeed, Inc. All rights reserved. Wolfspeed® and the Wolfstreak logo are registered trademarks and the Wolfspeed logo is a trademark of Wolfspeed, Inc.
The information in this document is subject to change without notice.

Typical Performance

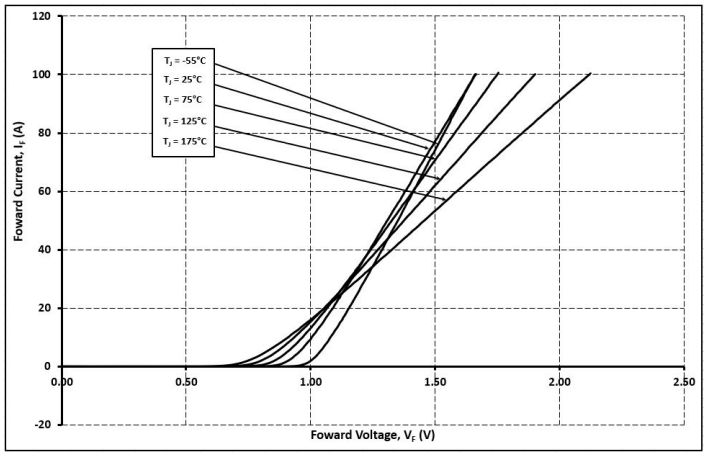

Figure 1
Forward Characteristics

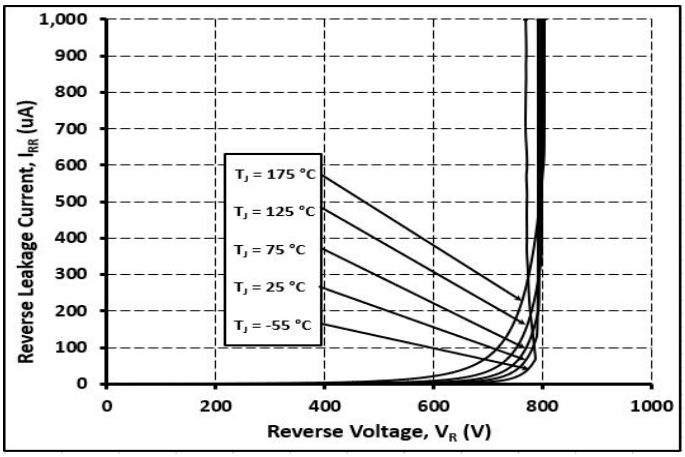

Figure 2
Reverse Characteristics

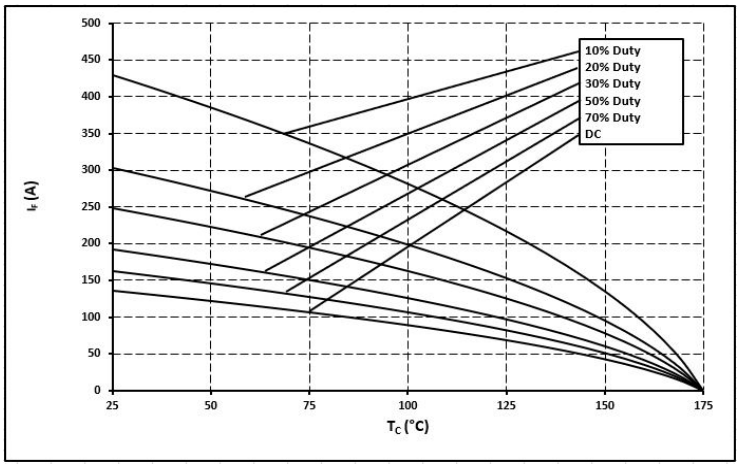

Figure 3
Current Derating

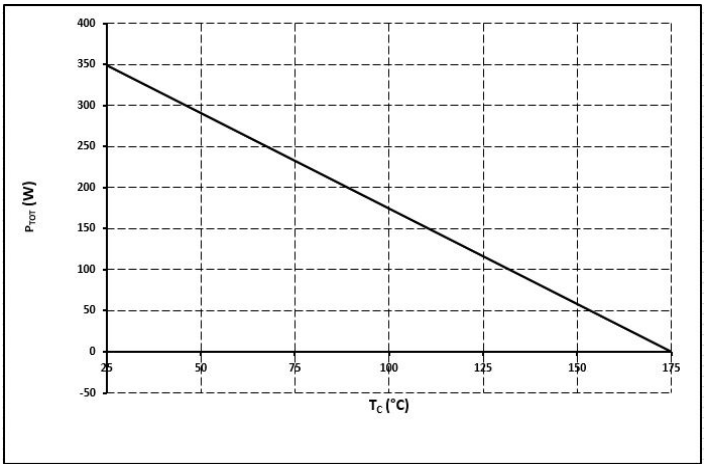

Figure 4
Power Derating

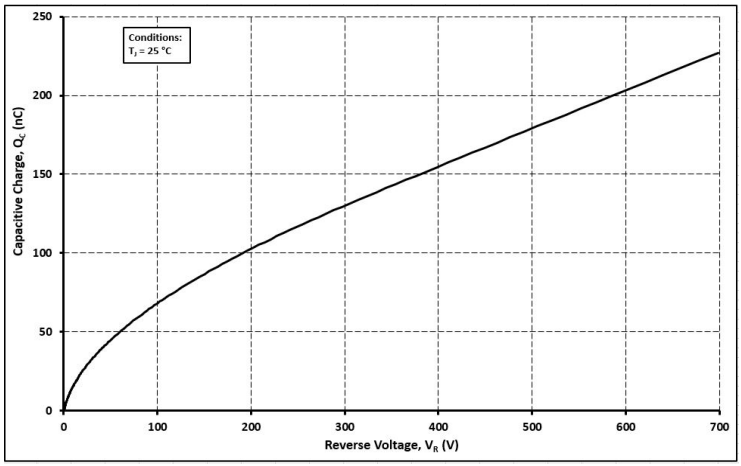

Figure 5
Total Capacitance Charge vs. Reverse Voltage

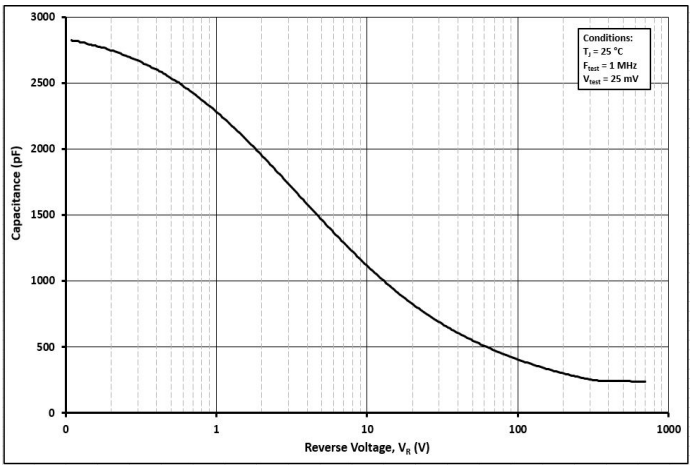

Figure 6
Capacitance vs. Reverse Voltage

© 2024 Wolfspeed, Inc. All rights reserved. Wolfspeed® and the Wolfstreak logo are registered trademarks and the Wolfspeed logo is a trademark of Wolfspeed, Inc.
The information in this document is subject to change without notice.

Typical Performance

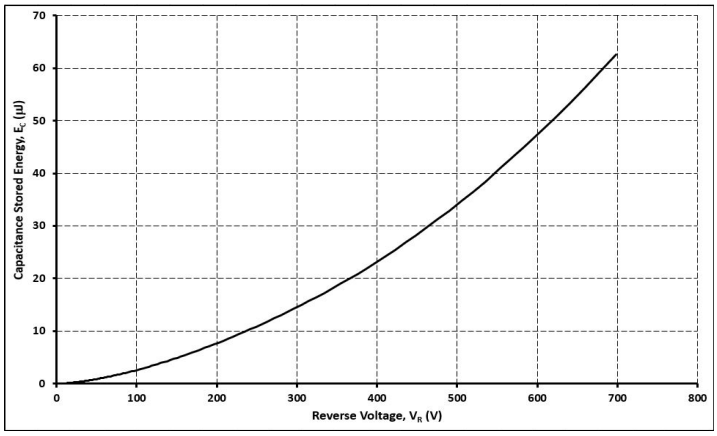

Figure 7

Capacitance Stored Energy

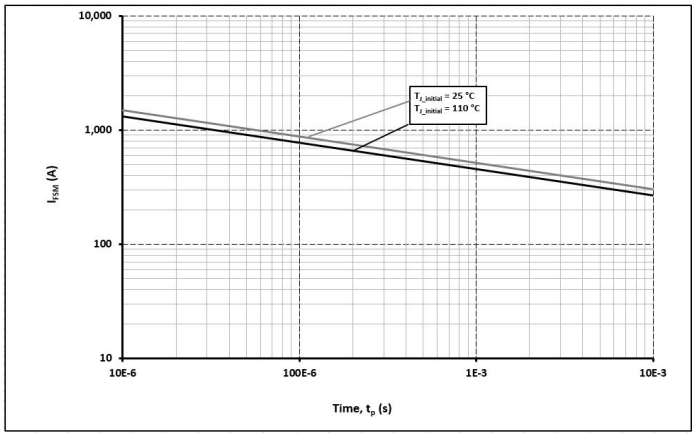

Figure 8

Non-Repetitive Peak Forward Surge Current vs. Pulse Duration

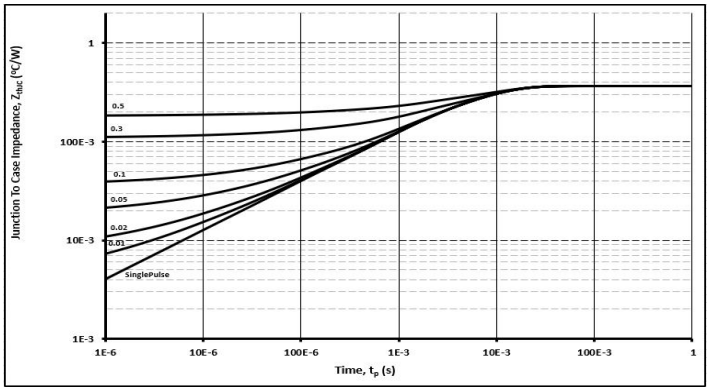

Figure 9

Transient Thermal Impedance

© 2024 Wolfspeed, Inc. All rights reserved. Wolfspeed® and the Wolfstreak logo are registered trademarks and the Wolfspeed logo is a trademark of Wolfspeed, Inc.
The information in this document is subject to change without notice.

Package Dimensions & Pin-Out

Package: TO-247-3

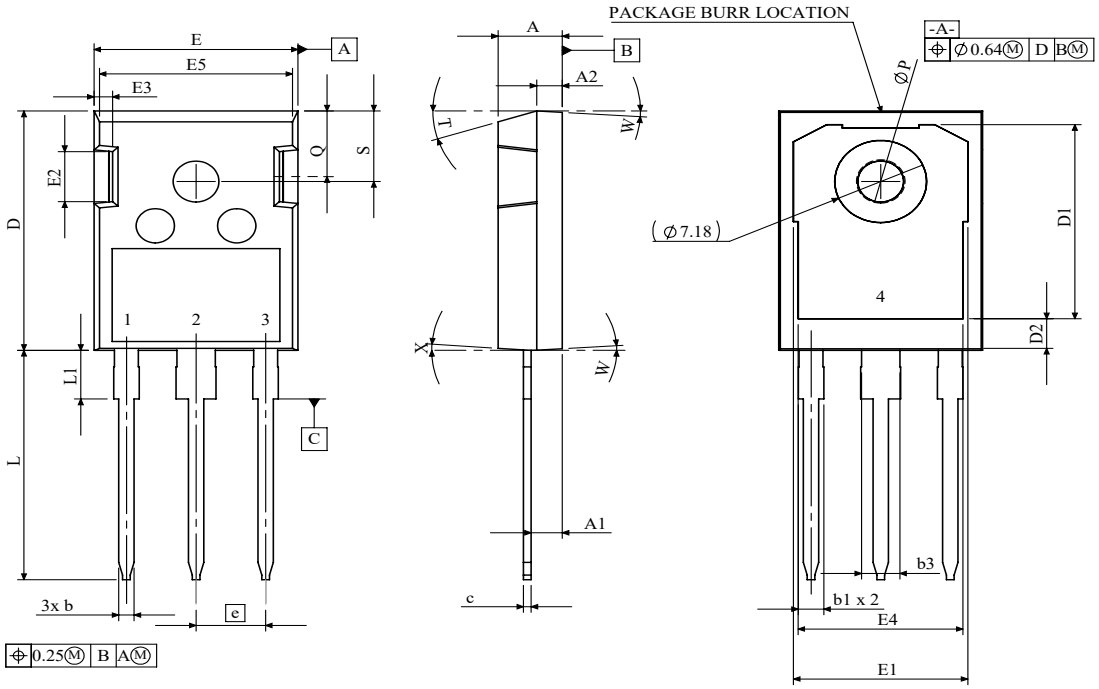

SYMBOL	MIN (mm)	MAX (mm)
A	4.83	5.21
A1	2.27	2.52
A2	1.91	2.16
b	1.07	1.33
b1	1.91	2.41
b3	2.87	3.38
c	0.55	0.74
D	20.75	21.05
D1	16	17.4
D2	2.86	3.26
E	15.75	16.13
E1	13.5	14.55
E2	3.68	5.1
E3	1	1.9
E4	12.38	13.43
E5	14.65	15.05
e	5.44 BSC	
L	19.73	20.48
L1	3.97	4.69
∅P	3.18	4.06
Q	5.42	5.96
S	5.85	6.49
T	17.5° REF.	
W	3.5° REF.	
X	4° REF.	

1	N/C
2	CATHODE
3	ANODE
4	CATHODE

NOTES:
1. ALL METAL SURFACES ARE TIN PLATED (MATTE), EXCEPT AREA OF CUT.
2. DIMENSIONING & TOLERANCING CONFORM TO ASME Y14.5M-1994.
3. ALL DIMENSIONS ARE LISTED IN MILLIMETERS. ANGLES ARE IN DEGREES.
4. BURR OR MOLD FLASH SIZE (0.5 mm) IS NOT INCLUDED IN THE DIMENSIONS

Wolfspeed

TITLE: PACKAGE OUTLINE DRAWING: TO-247-3L(SCHOTTKY 1 die)

Date: 03/4/24 | REVISION NO. 03 | A4

PRD 05407 | SCALE:1:1 | SHEET 1 OF 1

© 2024 Wolfspeed, Inc. All rights reserved. Wolfspeed® and the Wolfstreak logo are registered trademarks and the Wolfspeed logo is a trademark of Wolfspeed, Inc.
The information in this document is subject to change without notice.

Recommended Solder Pad Layout

Primary dimensions shown in mm.

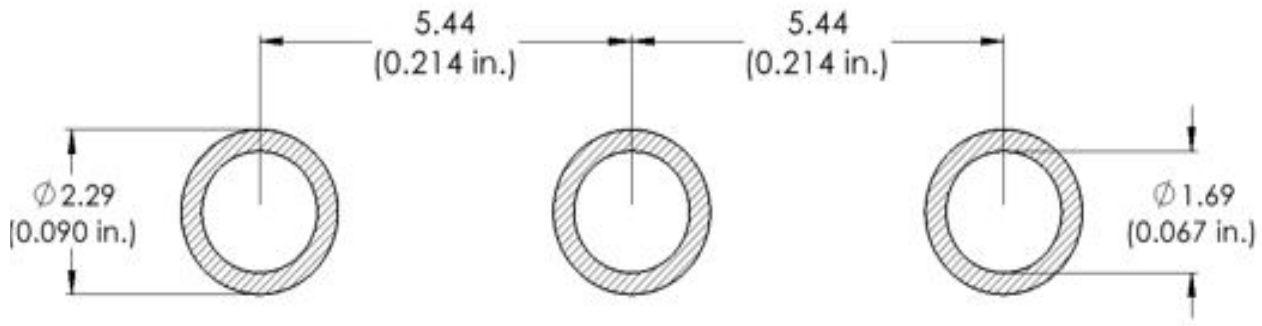

Product Ordering Information

Order Number	Packing Type
C6D50065D1	Tube

REACh, RoHS, and Halogen-Free compliance documentation available for this product.

© 2024 Wolfspeed, Inc. All rights reserved. Wolfspeed® and the Wolfstreak logo are registered trademarks and the Wolfspeed logo is a trademark of Wolfspeed, Inc.
The information in this document is subject to change without notice.

Revision History

Document Version	Date of Release	Description of Changes
0	March-2023	Initial Release
1	September - 2024	Legal Disclaimer and POD Updated

© 2024 Wolfspeed, Inc. All rights reserved. Wolfspeed® and the Wolfstreak logo are registered trademarks and the Wolfspeed logo is a trademark of Wolfspeed, Inc.
The information in this document is subject to change without notice.

Notes & Disclaimer

WOLFSPEED PROVIDES TECHNICAL AND RELIABILITY DATA, DESIGN RESOURCES, APPLICATION OR OTHER DESIGN ADVICE, WEB TOOLS, AND OTHER RESOURCES "AS IS" AND WITH ALL FAULTS, AND DISCLAIMS ALL WARRANTIES, EXPRESS AND IMPLIED, WITH RESPECT THERETO, INCLUDING WITHOUT LIMITATION ANY IMPLIED WARRANTIES OF MERCHANTABILITY, SUITABILITY, FITNESS FOR A PARTICULAR PURPOSE, OR NON-INFRINGEMENT OF THIRD-PARTY INTELLECTUAL PROPERTY RIGHTS.

This document and the information contained herein are subject to change without notice. Any such change shall be evidenced by the publication of an updated version of this document by Wolfspeed. No communication from any employee or agent of Wolfspeed or any third party shall effect an amendment or modification of this document. No responsibility is assumed by Wolfspeed for any infringement of patents or other rights of third parties which may result from use of the information contained herein. No license is granted by implication or otherwise under any patent or patent rights of Wolfspeed.

The information contained in this document (excluding examples, as well as figures or values that are labeled as "typical") constitutes Wolfspeed's sole published specifications for the subject product. "Typical" parameters are the average values expected by Wolfspeed in large quantities and are provided for informational purposes only. Any examples provided herein have not been produced under conditions intended to replicate any specific end use. Product performance can and does vary due to a number of factors.

This product has not been designed or tested for use in, and is not intended for use in, any application in which failure of the product would reasonably be expected to cause death, personal injury, or property damage. For purposes of (but without limiting) the foregoing, this product is not designed, intended, or authorized for use as a critical component in equipment implanted into the human body, life-support machines, cardiac defibrillators, and similar emergency medical equipment; air traffic control systems; or equipment used in the planning, construction, maintenance, or operation of nuclear facilities. Notwithstanding any application-specific information, guidance, assistance, or support that Wolfspeed may provide, the buyer of this product is solely responsible for determining the suitability of this product for the buyer's purposes, including without limitation (1) selecting the appropriate Wolfspeed products for the buyer's application, (2) designing, validating, and testing the buyer's application, and (3) ensuring the buyer's application meets applicable standards and any other legal, regulatory, and safety-related requirements.

RoHS Compliance

The levels of RoHS restricted materials in this product are below the maximum concentration values (also referred to as the threshold limits) permitted for such substances, or are used in an exempted application, in accordance with EU Directive 2011/65/EC (RoHS2), as implemented January 2, 2013. RoHS Declarations for this product can be obtained from your Wolfspeed representative or from the Product Documentation sections of www.wolfspeed.com.

REACh Compliance

REACh substances of high concern (SVHCs) information is available for this product. Since the European Chemical Agency (ECHA) has published notice of their intent to frequently revise the SVHC listing for the foreseeable future, please contact your Wolfspeed representative to ensure you get the most up-to-date REACh SVHC Declaration. REACh banned substance information (REACh Article 67) is also available upon request.

Contact info:

4600 Silicon Drive
Durham, NC 27703 USA
Tel: +1.919.313.5300
www.wolfspeed.com/power

© 2024 Wolfspeed, Inc. All rights reserved. Wolfspeed® and the Wolfstreak logo are registered trademarks and the Wolfspeed logo is a trademark of Wolfspeed, Inc.
PATENT: https://www.wolfspeed.com/legal/patents

The information in this document is subject to change without notice.

© 2024 Wolfspeed, Inc. All rights reserved. Wolfspeed® and the Wolfstreak logo are registered trademarks and the Wolfspeed logo is a trademark of Wolfspeed, Inc.
The information in this document is subject to change without notice.