XC6371/XC6372 Series

ETR04002-006

PWM,PWM/PFM Controlled Step-up DC/DC Converters

☆Green Operation Compatible

■GENERAL DESCRIPTION

The XC6371/XC6372 series is a group of PWM controlled and PWM/PFM controlled step-up DC/DC converters. The built-in 1.4Ω switching transistor type enables a step-up circuit to be configured using only three components, a coil, a diode, and a capacitor.

Output voltage can be selectable in the range from 2.0V to 7.0V in increments of 0.1V (accuracy:±2.5%). Oscillation frequency is also selectable from 50kHz, 100kHz, and 180kHz (accuracy:±15%) for the XC6371 and the XC6372 series. Soft-start time is internally set and offers protection against in-rush currents when the power is switched on and prevents voltage overshoot. Packages with CE (chip enable) pin are also available which can reduce the IC power consumption during during stand-by mode.

The XC6371 series is the standard PWM controlled products. The control of the XC6372 series switches from PWM to PFM control during light loads when automatically switching is selected and the series is highly efficient from light loads to large output currents.

■APPLICATIONS

- ●Smart phones / Mobile phones
- ●Note PCs / Tablet PCs
- ●Digital Still Cameras / Camcorders
- ●Mobile devices / terminals

■FEATURES

Operation Start Voltage Range : 0.9V ~ 10V
Output Voltage Range : 2.0V ~ 7.0V (0.1V increments)
Highly Accurate : ±2.5%
Oscillation Frequency : 50kHz, 100kHz, 180kHz (±15%)
Maximum Output Currents : 100mA(TYP.) @ V_{IN}=3.0V, V_{OUT}=5.0V *
Highly Efficient : 85%(TYP.) @ V_{IN}=3.0V, V_{OUT}=5.0V *
Built-in switching transistor.
CE pin type (XC6371C, XC6372C)
Phase compensation and soft start-up circuits built-in
CMOS Low Power Consumption
Packages : SOT-89, SOT-89-5, USP-6B
Environmentally Friendly: EU RoHS Compliant, Pb Free
* Performance depends on external components and PCB layout.

■TYPICAL APPLICATION CIRCUIT

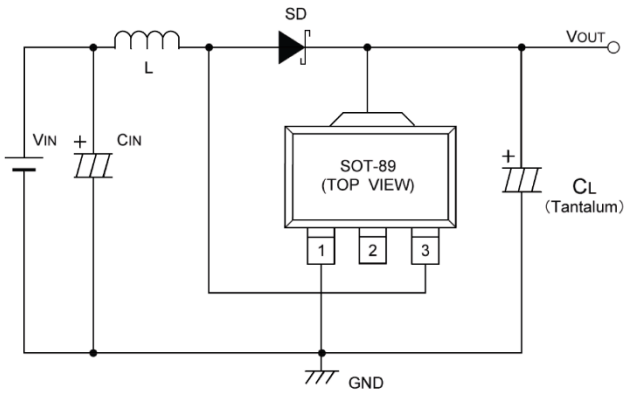

■TYPICAL PERFORMANCE CHARACTERISTICS

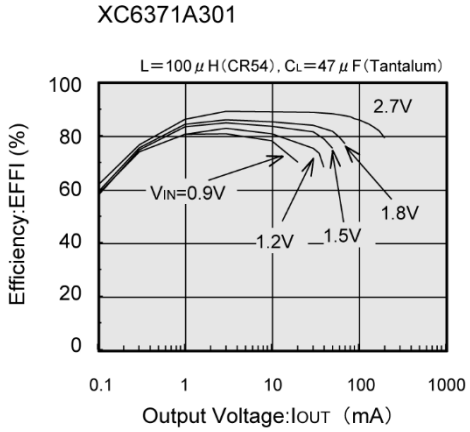

■PIN CONFIGURATION

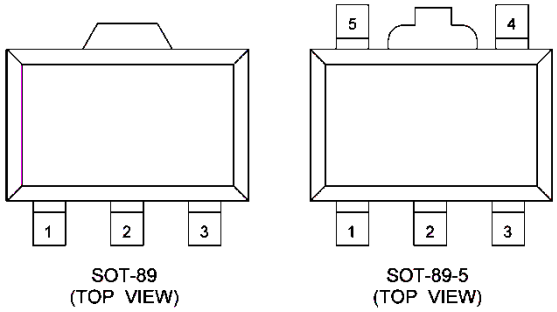

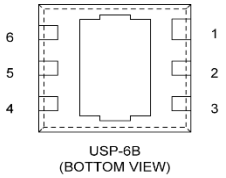

*The dissipation pad for the USP-6B package should be solder-plated in recommended mount pattern and metal masking so as to enhance mounting strength and heat release. If the pad needs to be connected to other pins, it should be connected to the pin No.1.

■PIN ASSIGNMENT

XC6371/XC6372A

PIN NUMBER		PIN NAME	FUNCTION
SOT-89	USP-6B		
1	6	Vss	Ground
2	1	VOUT	Output Voltage Monitor/IC Internal Power Supply
3	4	Lx	Switch
–	2, 3, 5	NC	No Connection

XC6371/XC6372C

PIN NUMBER		PIN NAME	FUNCTION
SOT-89-5	USP-6B		
5	6	Vss	Ground
2	1	VOUT	Output Voltage Monitor/IC Internal Power Supply
4	4	Lx	Switch
3	3	CE	Chip Enable
1	2, 5	NC	No Connection

■PRODUCT CLASSIFICATION

●Selection Guide

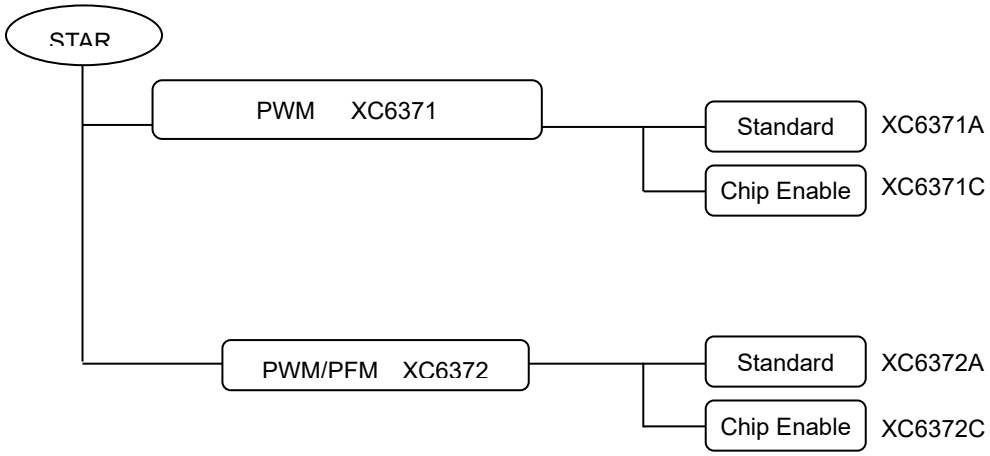

●Ordering Information

XC6371①②③④⑤⑥-⑦(*1) : PWM controlled
XC6372①②③④⑤⑥-⑦(*1) : PWM/PFM switching control

DESIGNATOR	DESCRIPTION	SYMBOL	DESCRIPTION
①	Type of DC/DC Converter	A	3-pin DC/DC converter with built-in switching transistor
		C	Stand-by capability with built-in switching transistor
②③	Output Voltage	Integer	e.g. VOUT=3.5V→②=3, ③=5
④	Oscillation Frequency	0	50kHz
		1	100kHz
		2	180kHz
⑤⑥-⑦	Packages Taping Type (*2)	PR-G	SOT-89 (XC6371/72 A type)
			SOT-89-5 (XC6371/72 C type)
		DR-G	USP-6B

(*1) The "-G" suffix indicates that the products are Halogen and Antimony free as well as being fully EU RoHS compliant.
(*2) The device orientation is fixed in its embossed tape pocket. For reverse orientation, please contact your local Torex sales office or representative. (Standard orientation: ⑤R-⑦, Reverse orientation: ⑤L-⑦)

■BLOCK DIAGRAMS

XC6371/XC6372A, C
(The VOUT pin serves also as VDD)

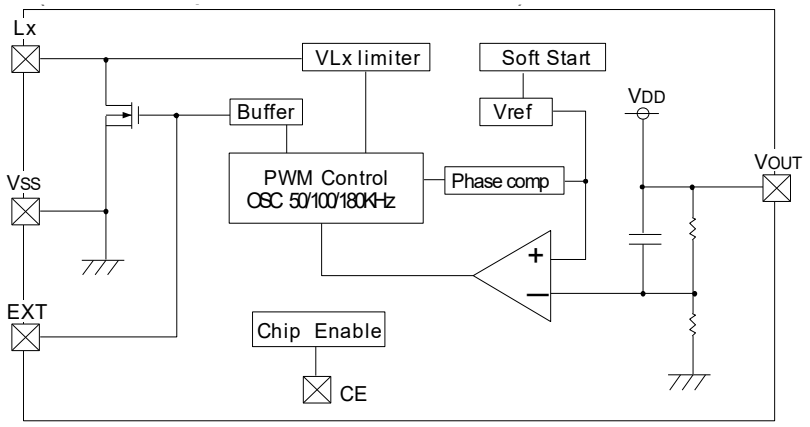

Note: The CE pin is only used with the XC6371C.

XC6371/72/73E

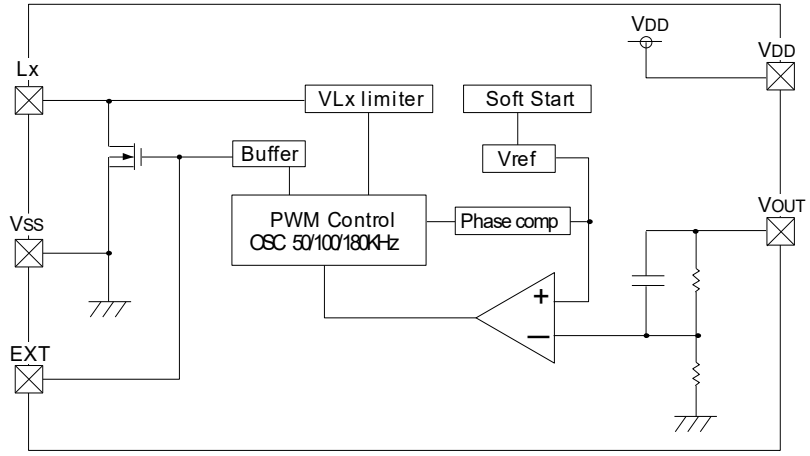

Note: Built-in transistor type units use the Lx pin.

■ABSOLUTE MAXIMUM RATINGS

Ta=25℃

PARAMETER		SYMBOL	RATINGS	UNITS
VOUT Input Voltage		VOUT	12	V
Lx pin Voltage		VLX	12	V
Lx pin Current		ILX	400	mA
CE Input Voltage		VCE	12	V
Power Dissipation	SOT-89, SOT-89-5	Pd	500	mW
	USP-6B		100	
VDD Input Voltage		VDD	12	V
Operating Temperature Range		Topr	-30 ~ 80	℃
Storage Temperature Range		Tstg	-40 ~ 125	℃

■ELECTRICAL CHARACTERISTICS

XC6371/72A501 V_{OUT}=5.0V, FOSC=100kHZ Ta=25℃

PARAMETER	SYMBOL	CONDITIONS	MIN.	TYP.	MAX.	UNITS
Output Voltage	V_{OUT}		4.875	5.000	5.125	V
Maximum Input Voltage	V_{IN}		10	-	-	V
Operation Start Voltage	V_{ST1}	External Components Connected, I_{OUT}=1mA	-	-	0.90	V
Oscillation Start Voltage	V_{ST2}	No external components. Apply voltage to V_{OUT} Lx : 10kΩ pull-up to 5V	-	-	0.80	V
No Load Input Current	I_{IN}	V_{IN}=V_{OUT}×0.8, I_{OUT}=0mA (*1)	-	12.8	25.7	μA
Supply Current 1	I_{DD1}	Same as V_{ST2}, Apply output voltage×0.95 to V_{OUT}	-	80.2	133.8	μA
Supply Current 2	I_{DD2}	Same as V_{ST2}, Apply output voltage×1.1 to V_{OUT}	-	8.2	16.5	μA
Lx Switch-On Resistance	R_{SWON}	Same as I_{DD1}, V_{LX}=0.4V	-	1.4	2.4	Ω
Lx Leak Current	I_{LXL}	No external components. V_{OUT}=V_{LX}=10V	-	-	1.0	μA
Oscillation Frequency	FOSC	Same as I_{DD1}. Measuring of Lx waveform	85	100	115	kHz
Maximum Duty Ratio	MAXDTY	Same as I_{DD1}. Measuring of Lx waveform	80	87	92	%
PFM Duty Ratio (*4)	PFMDTY	Same as I_{DD1}. Measuring of Lx waveform	10	17	25	%
Lx Limit Voltage	V_{LXLMT}	Same as I_{DD1}. Apply output voltage to Lx, Voltage required to produce FOSC×2	0.7	-	1.3	V
Efficiency	EFFI		-	85	-	%
Slow-Start Time	T_{SS}		4.0	10.0	20.0	ms

NOTE: Unless otherwise stated, V_{IN}=V_{OUT}×0.6, I_{OUT}=50mA. See Typical Application Circuits, Circuit1

*1: The Schottky diode (SD) must be type MA735, with reverse current (I_R)<1.0μA at reverse voltage (V_R)=10.0V.(XC6372A)
*2: "Supply Current 1" is the supply current while the oscillator is continuously oscillating. In actual operation the oscillator periodically operates which results in less average power consumption. The current actually provided by an external V_{IN} source is represented by "No Load Input Current (I_{IN})".
*3: When PWM operates at PWM Mode.
*4: When PFM operates at PFM Mode.(XC6372A)

■ELECTRICAL CHARACTERISTICS (Continued)

XC6371/72C501 V_{OUT}=5.0V, FOSC=100kHz Ta=25℃

PARAMETER	SYMBOL	CONDITIONS	MIN.	TYP.	MAX.	UNITS
Output Voltage	V_{OUT}		4.875	5.000	5.125	V
Maximum Input Voltage	V_{IN}		10	-	-	V
Operation Start Voltage	V_{ST1}	External Components Connected, I_{OUT}=1mA	-	-	0.90	V
Operation Start Voltage	V_{ST2}	No external components. Apply voltage to V_{OUT}, Lx : 10kΩ pull-up to 5V	-	-	0.80	V
No Load Input Current	I_{IN}	V_{IN}=V_{OUT}×0.8, I_{OUT}=0mA (*1)	-	12.8	25.7	μA
Supply Current 1	I_{DD1}	Same as V_{ST2}, Apply output voltage×0.95 to V_{OUT}	-	80.2	133.8	μA
Supply Current 2	I_{DD2}	Same as V_{ST2}, Apply output voltage×1.1 to V_{OUT}	-	8.2	16.5	μA
Lx Switch-On Resistance	R_{SWON}	Same as I_{DD1}, V_{Lx}=0.4V	-	1.4	2.4	Ω
Lx Leak Current	I_{LXL}	No external components, V_{OUT} =V_{LX}=10V	-	-	1.0	μA
Oscillation Frequency	FOSC	Same as I_{DD1}, Measuring of Lx waveform	85	100	115	kHz
Maximum Duty Ratio	MAXDTY	Same as I_{DD1}, Measuring of Lx waveform	80	87	92	%
PFM Duty Ratio (*4)	PFMDTY	Same as I_{DD1}, Measuring of Lx waveform	10	17	25	%
Stand-by Current	I_{STB}	Same as I_{DD1}	-	-	0.5	μA
CE "High" Voltage	V_{CEH}	Same as I_{DD1}, Lx Oscillation start	0.75	-	-	V
CE "Low" Voltage	V_{CEL}	Same as I_{DD1}, Lx Oscillation stop	-	-	0.20	V
CE "High" Current	I_{CEH}	Same as I_{DD1}, V_{CE}=V_{OUT}×0.95	-	-	0.25	μA
CE "Low" Current	I_{CEL}	Same as I_{DD1}, V_{CE}=0V	-	-	-0.25	μA
Lx Limit Voltage	V_{LxLMT}	Same as I_{DD1}, Apply output voltage to Lx, Voltage required to produce FOSC×2	0.7	-	1.3	V
Efficiency	EFFI		-	85	-	%
Slow-Start Time	T_{SS}		4.0	10.0	20.0	ms

NOTE: Unless otherwise stated, connect CE to V_{OUT}, V_{IN}=V_{OUT}×0.6, I_{OUT}=50mA. See Typical Application Circuits, Circuit 2.

*1: The Schottky diode (SD) must be type MA735, with reverse current (I_R)<1.0μA at reverse voltage (V_R)=10.0V.(XC6372C)

*2: "Supply Current 1" is the supply current while the oscillator is continuously oscillating. In actual operation the oscillator periodically operates which results in less average power consumption. The current actually provided by an external VIN source is represented by "No Load Input Current (I_{IN})".

*3: When PWM operates at PWM Mode.

*4: When PFM operates at PFM Mode.(XC6372C)

■TYPICAL APPRICATION CIRCUITS

Circuit 1: XC6372A series

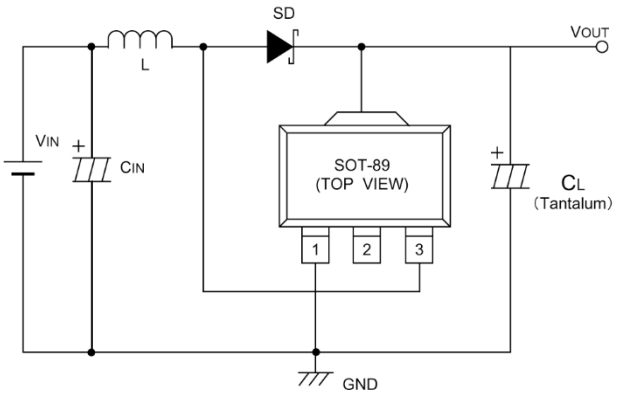

L : 100μH (SUMIDA, CR54)
SD : MA2Q735 (Schottky diode; MATSUSHITA)
CL : 16V 47μF (Tantalum capacitor, NICHICHEMI MCE)
CIN : 16V 220μF (Aluminium Electrolytic Capacitor)

Circuit 2: XC6372C series

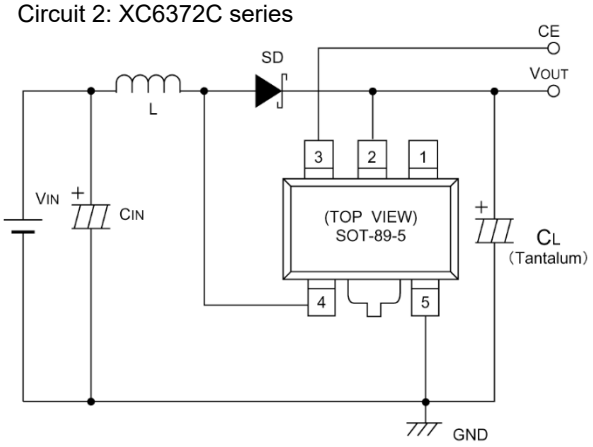

L : 100μH (CR54, SUMIDA)
SD : MA2Q735 (Schottky Diode; MATUSHITA)
CL : 16V 47μF (Tantalum Capacitor, NICHICHEMI MCE)
CIN : 16V 220μF (Aluminium Electrolytic Capacitor)

■TYPICAL PERFORMANCE CHARACTERISTICS

(1) Output Voltage vs. Output Current

XC6371A501PR

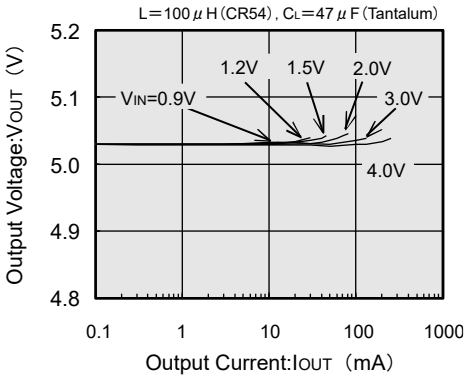

XC6371A301PR

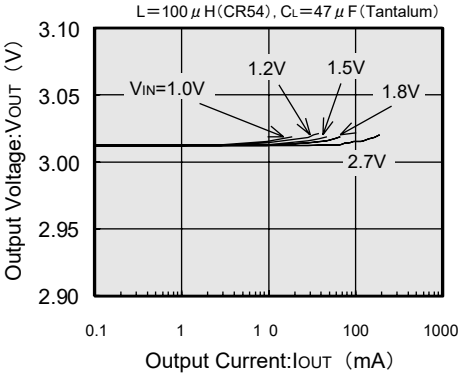

XC6372A501PR

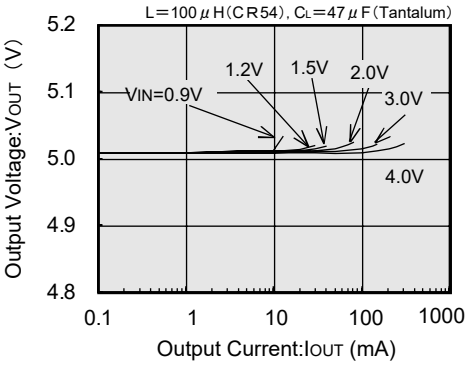

XC6372A301PR

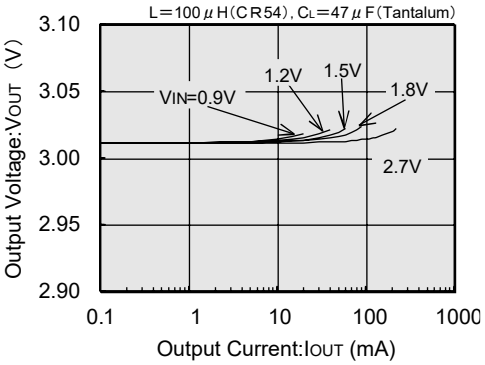

■TYPICAL PERFORMANCE CHARACTERISTICS (Continued)

(2) Efficiency vs. Output Current

XC6371A501PR

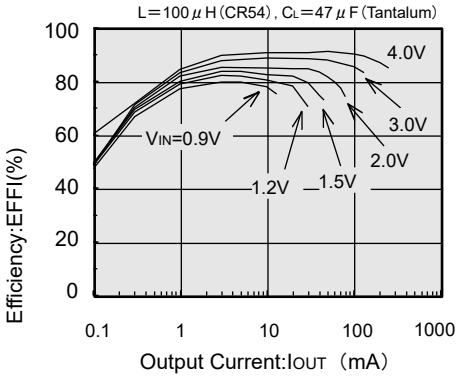

XC6371A301PR

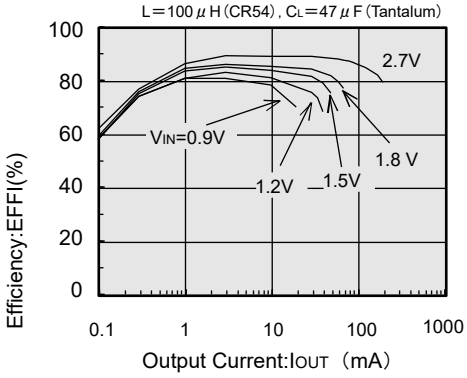

XC6372A501PR

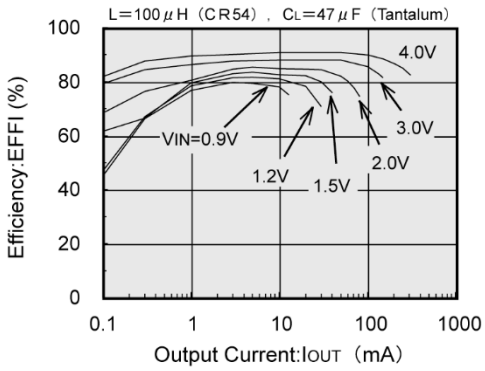

XC6372A301PR

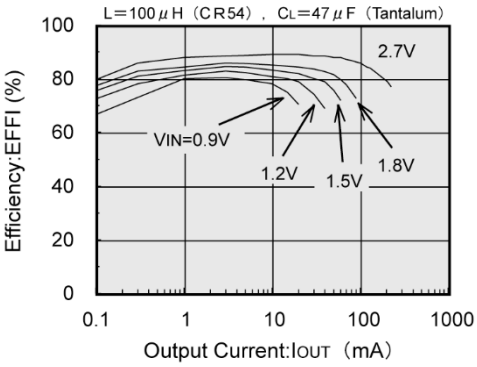

■TYPICAL PERFORMANCE CHARACTERISTICS (Continued)

(3) Ripple Voltage vs. Output Current

XC6371A501PR

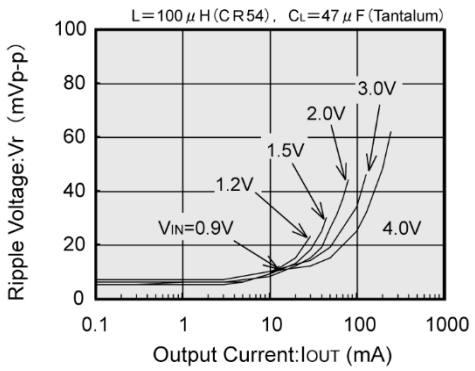

XC6371A301PR

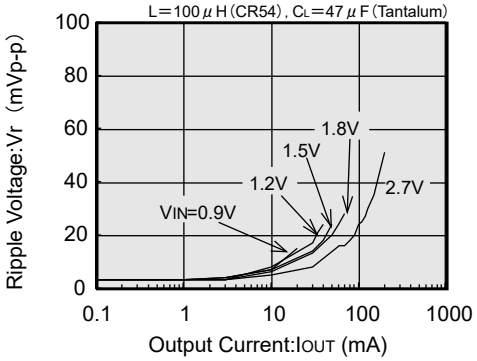

XC6372A501PR

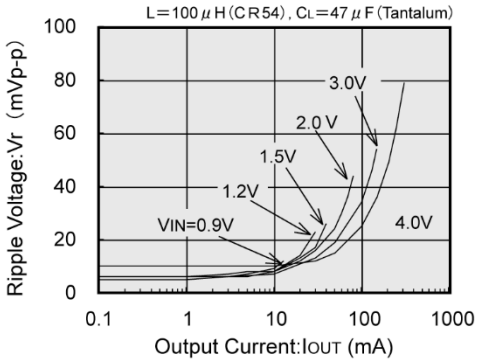

XC6372A301PR

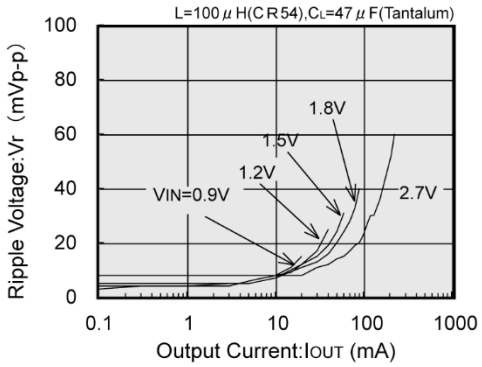

■TYPICAL PERFORMANCE CHARACTERISTICS (Continued)

(4) No Load Input Current vs. Input Voltage

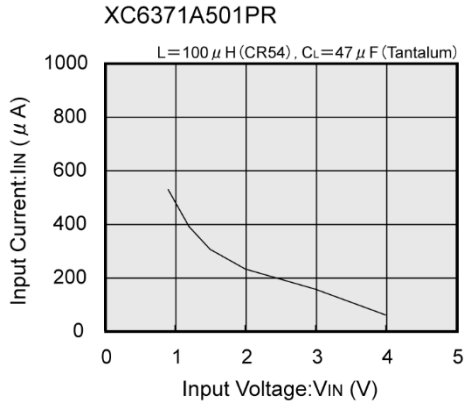

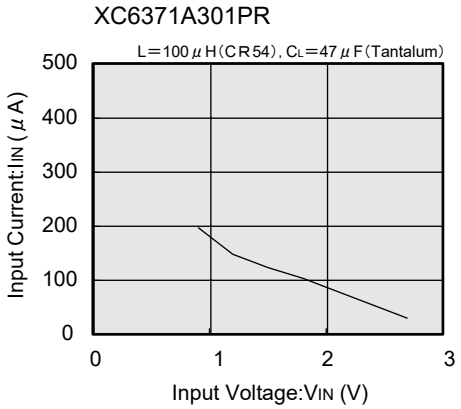

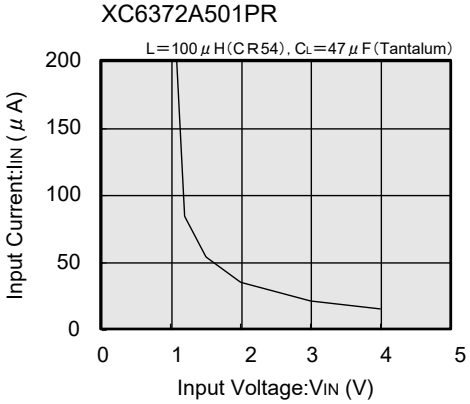

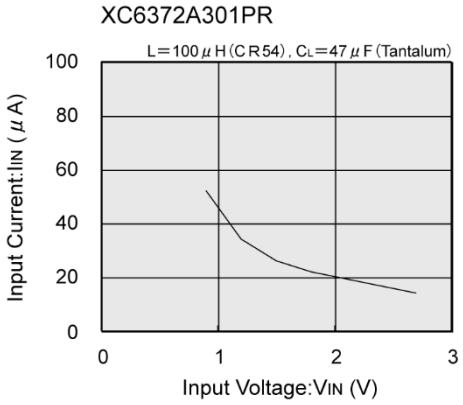

■TYPICAL PERFORMANCE CHARACTERISTICS (Continued)

(5) Operation Start Voltage / Hold Voltage vs. Output Current

XC6371A501

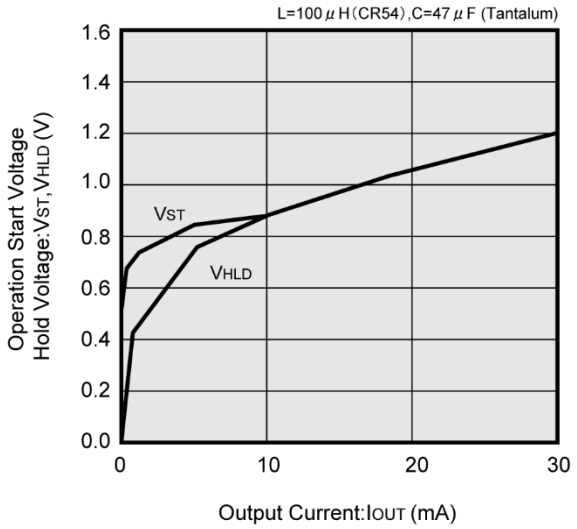

(6) Load Transient Response

XC6371A501

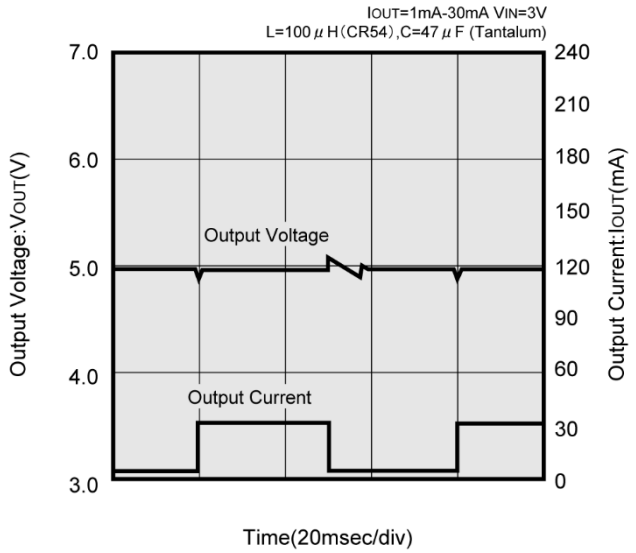

■PACKAGING INFORMATION

For the latest package information go to, www.torexsemi.com/technical-support/packages

PACKAGE	OUTLINE / LAND PATTERN	THERMAL CHARACTERISTICS
SOT-89	SOT-89 PKG	SOT-89 Power Dissipation
SOT-89-5	SOT-89-5 PKG	SOT-89-5 Power Dissipation
USP-6B	USP-6B PKG	USP-6B Power Dissipation

■MARKING RULE

[XC6371/XC6372]

●SOT-89, SOT-89-5

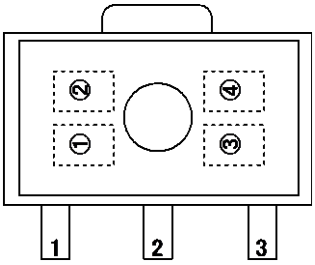

SOT-89
(TOP VIEW)

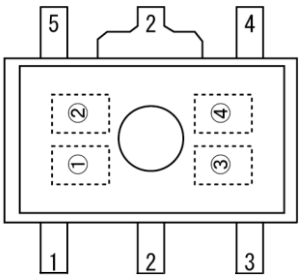

SOT-89-5
(TOP VIEW)

① represents product series

MARK	PRODUCT SERIES
$\overline{A}$	XC6371A
$\overline{A}$	XC6371C

MARK	PRODUCT SERIES
$\overline{1}$	XC6372A
$\overline{1}$	XC6372C

② represents integer of output voltage and oscillation frequency

OUTPUT VOLTAGE (V)	OSCILLATION FREQUENCY		
	50kHz	100kHz	180kHz
1.x	B	1	1
2.x	C	2	2
3.x	F	3	3
4.x	E	4	4
5.x	F	5	5
6.x	H	6	6
7.x	K	7	7

③ represents decimal number of output voltage and oscillation frequency

OUTPUT VOLTAGE (V)	OSCILLATION FREQUENCY		
	50kHz	100kHz	180kHz
x.0	0	0	A
x.1	1	1	B
x.2	2	2	C
x.3	3	3	D
x.4	4	4	E
x.5	5	5	F
x.6	6	6	H
x.7	7	7	K
x.8	8	8	L
x.9	9	9	M

④ represents production lot number
0 to 9, A to Z repeated (G, I, J, O, Q, W excluded).

■MARKING RULE (Continued)

[XC6371/XC6372] (Continued)

●USP-6B

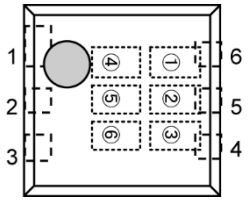

USP-6B
(TOP VIEW)

① represents product series

MARK	PRODUCT SERIES
5	XC6371xxxxDx
2	XC6372xxxxDx

② represents product classification

MARK	PRODUCT SERIES
A	XC6371A
C	XC6371C

③④ represents output voltage (ex.)

MARK		OUTPUT VOLTAGE (V)
③	④	
3	3	3.3
5	0	5.0

⑤ represents oscillation frequency

MARK	OSCILLATION FREQUENCY (kHz)
0	50
1	100
2	180

⑥ represents production lot number
0 to 9, A to Z repeated (G, I, J, O, Q, W excluded)
Note: No character inversion used.

1. The product and product specifications contained herein are subject to change without notice to improve performance characteristics. Consult us, or our representatives before use, to confirm that the information in this datasheet is up to date.

2. The information in this datasheet is intended to illustrate the operation and characteristics of our products. We neither make warranties or representations with respect to the accuracy or completeness of the information contained in this datasheet nor grant any license to any intellectual property rights of ours or any third party concerning with the information in this datasheet.

3. Applicable export control laws and regulations should be complied and the procedures required by such laws and regulations should also be followed, when the product or any information contained in this datasheet is exported.

4. The product is neither intended nor warranted for use in equipment of systems which require extremely high levels of quality and/or reliability and/or a malfunction or failure which may cause loss of human life, bodily injury, serious property damage including but not limited to devices or equipment used in 1) nuclear facilities, 2) aerospace industry, 3) medical facilities, 4) automobile industry and other transportation industry and 5) safety devices and safety equipment to control combustions and explosions. Do not use the product for the above use unless agreed by us in writing in advance.

5. Although we make continuous efforts to improve the quality and reliability of our products; nevertheless Semiconductors are likely to fail with a certain probability. So in order to prevent personal injury and/or property damage resulting from such failure, customers are required to incorporate adequate safety measures in their designs, such as system fail safes, redundancy and fire prevention features.

6. Our products are not designed to be Radiation-resistant.

7. Please use the product listed in this datasheet within the specified ranges.

8. We assume no responsibility for damage or loss due to abnormal use.

9. All rights reserved. No part of this datasheet may be copied or reproduced unless agreed by Torex Semiconductor Ltd in writing in advance.

TOREX SEMICONDUCTOR LTD.