Document Number: K20P81M100SF2V2
Rev. 4, 09/2017

K20P81M100SF2V2, K20 Sub-Family Data Sheet with Addendum, Supports: MK20DX256VLK10, MK20DN512VLK10

Revision 4 of the K20 Sub-Family Data Sheet has two parts:

- The addendum to Revision 3 of the data sheet, immediately after this cover page.
- Revision 3 of the data sheet, after the addendum. The changes described in the addendum have not been implemented in in Revision 3 of the data sheet.

9 Revision history

Table 51. Revision History

Rev. No.	Date	Substantial Changes
4	9/2017	In **Thermal specifications / Thermal attributes** section, the thermal resistance parameter (junction to case, $R_{\theta JC}$) is now 9°C/W (it was previously 8°C/W).

© 2017 NXP Semiconductors, All rights reserved.

Freescale Semiconductor, Inc.
Data Sheet Addendum

Document Number: K20P81M100SF2V2AD
Rev. 0, 09/2017

Addendum to Rev. 3 of the K20P81M100SF2V2, K20 Sub-Family Data Sheet, Supports: MK20DX256VLK10, MK20DN512VLK10

This addendum identifies changes to Rev. 3 of the K20P81M100SF2V2, K20 Sub-Family Data Sheet. The change described in this addendum has not been implemented in the Rev. 3 data sheet.

In the Thermal attributes section, the thermal resistance parameter (junction to case, $R_{\theta JC}$) is now 9°C/W (it was previously 8°C/W).

5.4.2 Thermal attributes

Board type	Symbol	Description	80 LQFP	Unit	Notes
—	$R_{\theta JC}$	Thermal resistance, junction to case	9	°C/W	4

© 2017 Freescale Semiconductor, Inc. All rights reserved.

Freescale Semiconductor
Data Sheet: Technical Data

Document Number: K20P81M100SF2V2
Rev. 3, 6/2013

K20P81M100SF2V2

K20 Sub-Family

Supports the following:
MK20DX256VLK10, MK20DN512VLK10

Features

- Operating Characteristics
  - Voltage range: 1.71 to 3.6 V
  - Flash write voltage range: 1.71 to 3.6 V
  - Temperature range (ambient): -40 to 105°C
- Performance
  - Up to 100 MHz ARM Cortex-M4 core with DSP instructions delivering 1.25 Dhrystone MIPS per MHz
- Memories and memory interfaces
  - Up to 512 KB program flash memory on non-FlexMemory devices
  - Up to 128 KB RAM
  - Serial programming interface (EzPort)
  - FlexBus external bus interface
- Clocks
  - 3 to 32 MHz crystal oscillator
  - 32 kHz crystal oscillator
  - Multi-purpose clock generator
- System peripherals
  - Multiple low-power modes to provide power optimization based on application requirements
  - Memory protection unit with multi-master protection
  - 16-channel DMA controller, supporting up to 63 request sources
  - External watchdog monitor
  - Software watchdog
  - Low-leakage wakeup unit
- Security and integrity modules
  - Hardware CRC module to support fast cyclic redundancy checks
  - 128-bit unique identification (ID) number per chip
- Human-machine interface
  - Low-power hardware touch sensor interface (TSI)
  - General-purpose input/output
- Analog modules
  - Two 16-bit SAR ADCs
  - Programmable gain amplifier (PGA) (up to x64) integrated into each ADC
  - 12-bit DAC
  - Two transimpedance amplifiers
  - Three analog comparators (CMP) containing a 6-bit DAC and programmable reference input
  - Voltage reference
- Timers
  - Programmable delay block
  - Eight-channel motor control/general purpose/PWM timer
  - Two 2-channel quadrature decoder/general purpose timers
  - Periodic interrupt timers
  - 16-bit low-power timer
  - Carrier modulator transmitter
  - Real-time clock
- Communication interfaces
  - USB full-/low-speed On-the-Go controller with on-chip transceiver
  - Two Controller Area Network (CAN) modules
  - Two SPI modules
  - Two I2C modules
  - Four UART modules
  - Secure Digital host controller (SDHC)
  - I2S module

Freescale reserves the right to change the detail specifications as may be required to permit improvements in the design of its products.

© 2012–2013 Freescale Semiconductor, Inc.

Table of Contents

1 Ordering parts....4
1.1 Determining valid orderable parts....4
2 Part identification....4
2.1 Description....4
2.2 Format....4
2.3 Fields....4
2.4 Example....5
3 Terminology and guidelines....5
3.1 Definition: Operating requirement....5
3.2 Definition: Operating behavior....6
3.3 Definition: Attribute....6
3.4 Definition: Rating....7
3.5 Result of exceeding a rating....7
3.6 Relationship between ratings and operating requirements....7
3.7 Guidelines for ratings and operating requirements....8
3.8 Definition: Typical value....8
3.9 Typical value conditions....9
4 Ratings....10
4.1 Thermal handling ratings....10
4.2 Moisture handling ratings....10
4.3 ESD handling ratings....10
4.4 Voltage and current operating ratings....10
5 General....11
5.1 AC electrical characteristics....11
5.2 Nonswitching electrical specifications....11
5.2.1 Voltage and current operating requirements....12
5.2.2 LVD and POR operating requirements....13
5.2.3 Voltage and current operating behaviors....13
5.2.4 Power mode transition operating behaviors....15
5.2.5 Power consumption operating behaviors....16
5.2.6 EMC radiated emissions operating behaviors....19
5.2.7 Designing with radiated emissions in mind....20
5.2.8 Capacitance attributes....20
5.3 Switching specifications....20
5.3.1 Device clock specifications....20
5.3.2 General switching specifications....21
5.4 Thermal specifications....22
5.4.1 Thermal operating requirements....22
5.4.2 Thermal attributes....22
6 Peripheral operating requirements and behaviors....23
6.1 Core modules....23
6.1.1 Debug trace timing specifications....23
6.1.2 JTAG electricals....24
6.2 System modules....27
6.3 Clock modules....27
6.3.1 MCG specifications....27
6.3.2 Oscillator electrical specifications....29
6.3.3 32 kHz oscillator electrical characteristics....32
6.4 Memories and memory interfaces....32
6.4.1 Flash electrical specifications....32
6.4.2 EzPort switching specifications....34
6.4.3 Flexbus switching specifications....35
6.5 Security and integrity modules....38
6.6 Analog....38
6.6.1 ADC electrical specifications....38
6.6.2 CMP and 6-bit DAC electrical specifications....46
6.6.3 12-bit DAC electrical characteristics....49
6.6.4 Voltage reference electrical specifications....52
6.7 Timers....53
6.8 Communication interfaces....53
6.8.1 USB electrical specifications....53
6.8.2 USB DCD electrical specifications....54
6.8.3 USB VREG electrical specifications....54
6.8.4 CAN switching specifications....55
6.8.5 DSPI switching specifications (limited voltage range)....55
6.8.6 DSPI switching specifications (full voltage range)....56
6.8.7 Inter-Integrated Circuit Interface (I2C) timing....58
6.8.8 UART switching specifications....59
6.8.9 SDHC specifications....59
6.8.10 I2S/SAI switching specifications....60
6.9 Human-machine interfaces (HMI)....67
6.9.1 TSI electrical specifications....67
7 Dimensions....68
7.1 Obtaining package dimensions....68
8 Pinout....68
8.1 K20 signal multiplexing and pin assignments....68
8.2 K20 pinouts....72

9 Revision history.....73

1 Ordering parts

1.1 Determining valid orderable parts

Valid orderable part numbers are provided on the web. To determine the orderable part numbers for this device, go to freescale.com and perform a part number search for the following device numbers: PK20 and MK20 .

2 Part identification

2.1 Description

Part numbers for the chip have fields that identify the specific part. You can use the values of these fields to determine the specific part you have received.

2.2 Format

Part numbers for this device have the following format:

Q K## A M FFF R T PP CC N

2.3 Fields

This table lists the possible values for each field in the part number (not all combinations are valid):

Field	Description	Values
Q	Qualification status	• M = Fully qualified, general market flow • P = Prequalification
K##	Kinetis family	• K20
A	Key attribute	• D = Cortex-M4 w/ DSP • F = Cortex-M4 w/ DSP and FPU
M	Flash memory type	• N = Program flash only • X = Program flash and FlexMemory

Table continues on the next page...

Field	Description	Values
FFF	Program flash memory size	• 32 = 32 KB • 64 = 64 KB • 128 = 128 KB • 256 = 256 KB • 512 = 512 KB • 1M0 = 1 MB • 2M0 = 2 MB
R	Silicon revision	• Z = Initial • (Blank) = Main • A = Revision after main
T	Temperature range (°C)	• V = –40 to 105 • C = –40 to 85
PP	Package identifier	• FM = 32 QFN (5 mm x 5 mm) • FT = 48 QFN (7 mm x 7 mm) • LF = 48 LQFP (7 mm x 7 mm) • LH = 64 LQFP (10 mm x 10 mm) • MP = 64 MAPBGA (5 mm x 5 mm) • LK = 80 LQFP (12 mm x 12 mm) • LL = 100 LQFP (14 mm x 14 mm) • MC = 121 MAPBGA (8 mm x 8 mm) • LQ = 144 LQFP (20 mm x 20 mm) • MD = 144 MAPBGA (13 mm x 13 mm) • MJ = 256 MAPBGA (17 mm x 17 mm)
CC	Maximum CPU frequency (MHz)	• 5 = 50 MHz • 7 = 72 MHz • 10 = 100 MHz • 12 = 120 MHz • 15 = 150 MHz
N	Packaging type	• R = Tape and reel • (Blank) = Trays

2.4 Example

This is an example part number:

MK20DN512ZVMD10

3 Terminology and guidelines

3.1 Definition: Operating requirement

An *operating requirement* is a specified value or range of values for a technical characteristic that you must guarantee during operation to avoid incorrect operation and possibly decreasing the useful life of the chip.

3.1.1 Example

This is an example of an operating requirement:

Symbol	Description	Min.	Max.	Unit
V_{DD}	1.0 V core supply voltage	0.9	1.1	V

3.2 Definition: Operating behavior

An *operating behavior* is a specified value or range of values for a technical characteristic that are guaranteed during operation if you meet the operating requirements and any other specified conditions.

3.2.1 Example

This is an example of an operating behavior:

Symbol	Description	Min.	Max.	Unit
I_{WP}	Digital I/O weak pullup/ pulldown current	10	130	µA

3.3 Definition: Attribute

An *attribute* is a specified value or range of values for a technical characteristic that are guaranteed, regardless of whether you meet the operating requirements.

3.3.1 Example

This is an example of an attribute:

Symbol	Description	Min.	Max.	Unit
CIN_D	Input capacitance: digital pins	—	7	pF

3.4 Definition: Rating

A *rating* is a minimum or maximum value of a technical characteristic that, if exceeded, may cause permanent chip failure:

- *Operating ratings* apply during operation of the chip.
- *Handling ratings* apply when the chip is not powered.

3.4.1 Example

This is an example of an operating rating:

Symbol	Description	Min.	Max.	Unit
V_{DD}	1.0 V core supply voltage	–0.3	1.2	V

3.5 Result of exceeding a rating

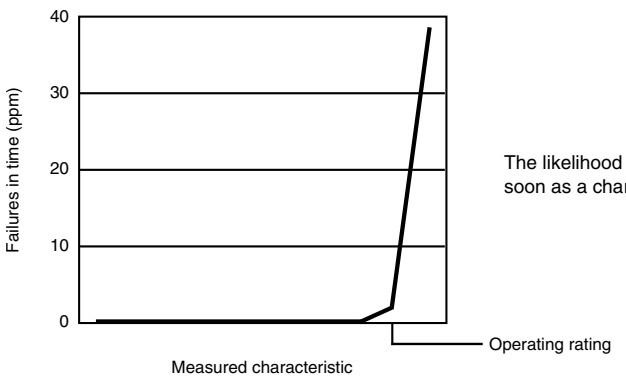

The likelihood of permanent chip failure increases rapidly as soon as a characteristic begins to exceed one of its operating ratings.

3.6 Relationship between ratings and operating requirements

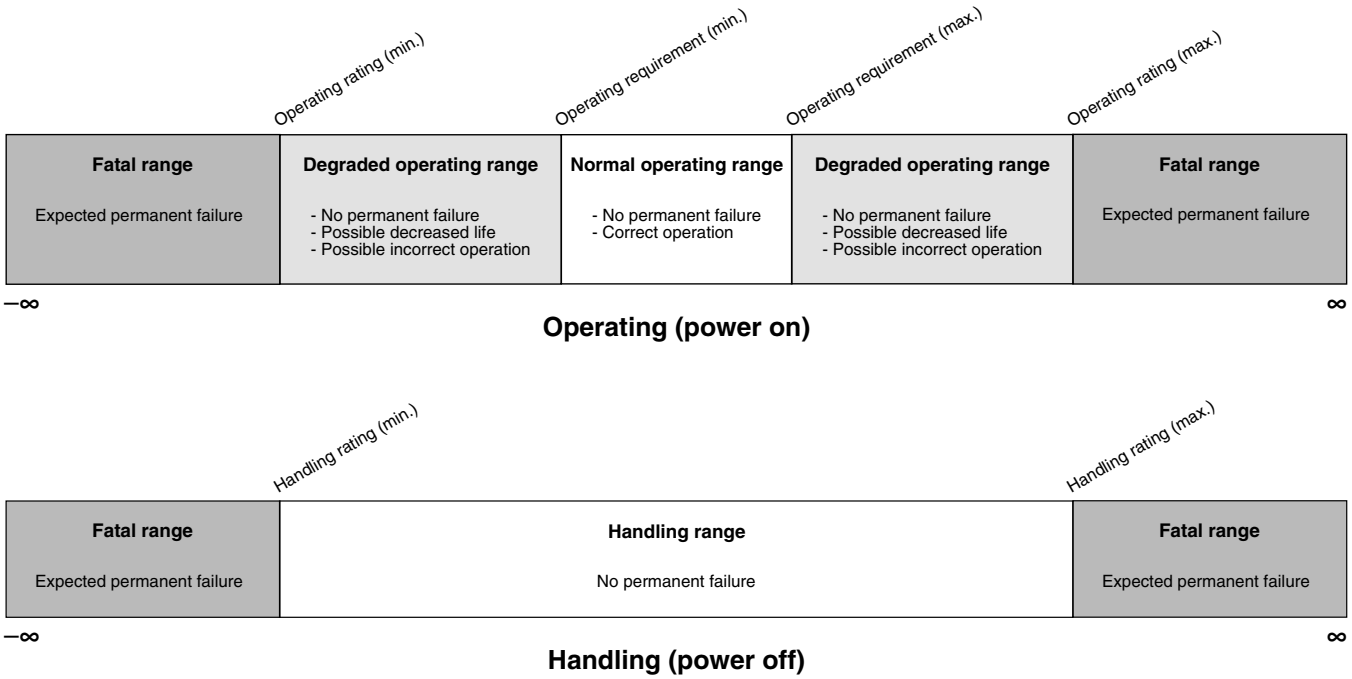

3.7 Guidelines for ratings and operating requirements

Follow these guidelines for ratings and operating requirements:

- Never exceed any of the chip's ratings.
- During normal operation, don't exceed any of the chip's operating requirements.
- If you must exceed an operating requirement at times other than during normal operation (for example, during power sequencing), limit the duration as much as possible.

3.8 Definition: Typical value

A *typical value* is a specified value for a technical characteristic that:

- Lies within the range of values specified by the operating behavior
- Given the typical manufacturing process, is representative of that characteristic during operation when you meet the typical-value conditions or other specified conditions

Typical values are provided as design guidelines and are neither tested nor guaranteed.

3.8.1 Example 1

This is an example of an operating behavior that includes a typical value:

Symbol	Description	Min.	Typ.	Max.	Unit
I_{WP}	Digital I/O weak pullup/pulldown current	10	70	130	μA

3.8.2 Example 2

This is an example of a chart that shows typical values for various voltage and temperature conditions:

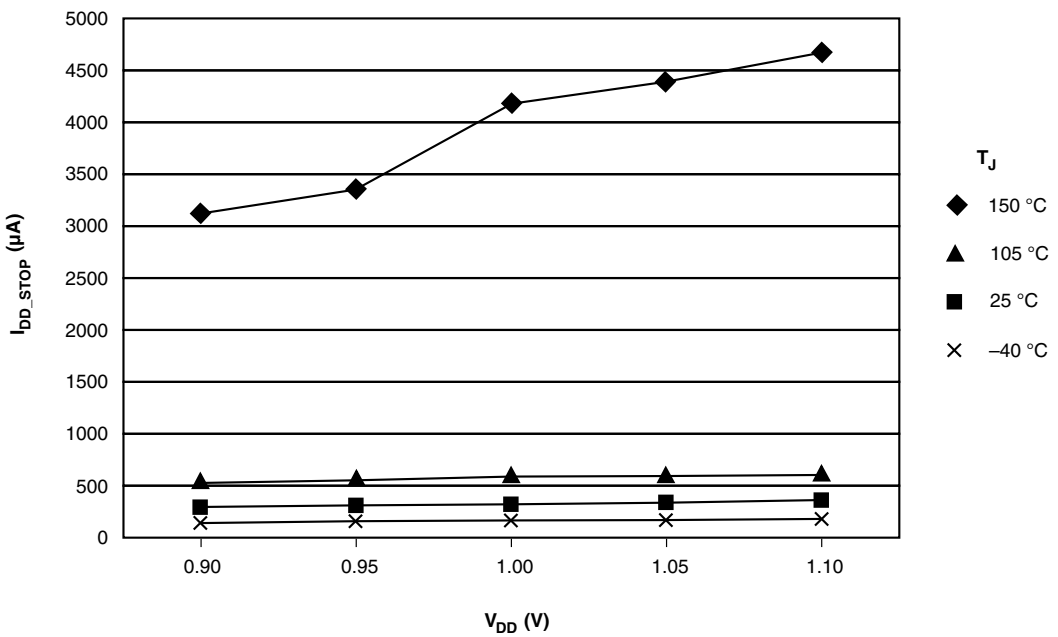

3.9 Typical value conditions

Typical values assume you meet the following conditions (or other conditions as specified):

Symbol	Description	Value	Unit
T_A	Ambient temperature	25	°C
V_{DD}	3.3 V supply voltage	3.3	V

4 Ratings

4.1 Thermal handling ratings

Symbol	Description	Min.	Max.	Unit	Notes
T_{STG}	Storage temperature	–55	150	°C	1
T_{SDR}	Solder temperature, lead-free	—	260	°C	2

1. Determined according to JEDEC Standard JESD22-A103, *High Temperature Storage Life*.
2. Determined according to IPC/JEDEC Standard J-STD-020, *Moisture/Reflow Sensitivity Classification for Nonhermetic Solid State Surface Mount Devices*.

4.2 Moisture handling ratings

Symbol	Description	Min.	Max.	Unit	Notes
MSL	Moisture sensitivity level	—	3	—	1

1. Determined according to IPC/JEDEC Standard J-STD-020, *Moisture/Reflow Sensitivity Classification for Nonhermetic Solid State Surface Mount Devices*.

4.3 ESD handling ratings

Symbol	Description	Min.	Max.	Unit	Notes
V_{HBM}	Electrostatic discharge voltage, human body model	-2000	+2000	V	1
V_{CDM}	Electrostatic discharge voltage, charged-device model	-500	+500	V	2
I_{LAT}	Latch-up current at ambient temperature of 105°C	-100	+100	mA	3

1. Determined according to JEDEC Standard JESD22-A114, *Electrostatic Discharge (ESD) Sensitivity Testing Human Body Model (HBM)*.
2. Determined according to JEDEC Standard JESD22-C101, *Field-Induced Charged-Device Model Test Method for Electrostatic-Discharge-Withstand Thresholds of Microelectronic Components*.
3. Determined according to JEDEC Standard JESD78, *IC Latch-Up Test*.

4.4 Voltage and current operating ratings

Symbol	Description	Min.	Max.	Unit
V_{DD}	Digital supply voltage	–0.3	3.8	V
I_{DD}	Digital supply current	—	185	mA
V_{DIO}	Digital input voltage (except $\overline{RESET}$, EXTAL, and XTAL)	–0.3	5.5	V
V_{AIO}	Analog[1], $\overline{RESET}$, EXTAL, and XTAL input voltage	–0.3	V_{DD} + 0.3	V
I_D	Maximum current single pin limit (applies to all digital pins)	–25	25	mA
V_{DDA}	Analog supply voltage	V_{DD} – 0.3	V_{DD} + 0.3	V
V_{USB_DP}	USB_DP input voltage	–0.3	3.63	V
V_{USB_DM}	USB_DM input voltage	–0.3	3.63	V
VREGIN	USB regulator input	–0.3	6.0	V
V_{BAT}	RTC battery supply voltage	–0.3	3.8	V

1. Analog pins are defined as pins that do not have an associated general purpose I/O port function.

5 General

5.1 AC electrical characteristics

Unless otherwise specified, propagation delays are measured from the 50% to the 50% point, and rise and fall times are measured at the 20% and 80% points, as shown in the following figure.

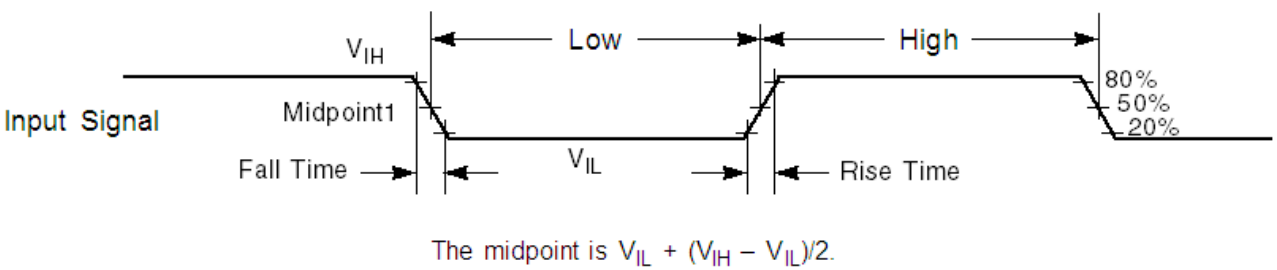

Figure 1. Input signal measurement reference

All digital I/O switching characteristics assume:

1. output pins
   - have C_L=30pF loads,
   - are configured for fast slew rate (PORTx_PCRn[SRE]=0), and
   - are configured for high drive strength (PORTx_PCRn[DSE]=1)
2. input pins
   - have their passive filter disabled (PORTx_PCRn[PFE]=0)

5.2 Nonswitching electrical specifications

5.2.1 Voltage and current operating requirements

Table 1. Voltage and current operating requirements

Symbol	Description	Min.	Max.	Unit	Notes
V_{DD}	Supply voltage	1.71	3.6	V	
V_{DDA}	Analog supply voltage	1.71	3.6	V	
$V_{DD} – V_{DDA}$	V_{DD}-to-V_{DDA} differential voltage	–0.1	0.1	V	
$V_{SS} – V_{SSA}$	V_{SS}-to-V_{SSA} differential voltage	–0.1	0.1	V	
V_{BAT}	RTC battery supply voltage	1.71	3.6	V	
V_{IH}	Input high voltage • $2.7\ V \le V_{DD} \le 3.6\ V$ • $1.7\ V \le V_{DD} \le 2.7\ V$	 $0.7 \times V_{DD}$ $0.75 \times V_{DD}$	 — —	 V V	
V_{IL}	Input low voltage • $2.7\ V \le V_{DD} \le 3.6\ V$ • $1.7\ V \le V_{DD} \le 2.7\ V$	 — —	 $0.35 \times V_{DD}$ $0.3 \times V_{DD}$	 V V	
V_{HYS}	Input hysteresis	$0.06 \times V_{DD}$	—	V	
I_{ICDIO}	Digital pin negative DC injection current — single pin • $V_{IN} < V_{SS}$-0.3V	-5	—	mA	1
I_{ICAIO}	Analog[2], EXTAL, and XTAL pin DC injection current — single pin • $V_{IN} < V_{SS}$-0.3V (Negative current injection) • $V_{IN} > V_{DD}$+0.3V (Positive current injection)	 -5 —	 — +5	mA	3
I_{ICcont}	Contiguous pin DC injection current —regional limit, includes sum of negative injection currents or sum of positive injection currents of 16 contiguous pins • Negative current injection • Positive current injection	 -25 —	 — +25	mA	
V_{ODPU}	Open drain pullup voltage level	V_{DD}	V_{DD}	V	4
V_{RAM}	V_{DD} voltage required to retain RAM	1.2	—	V	
V_{RFVBAT}	V_{BAT} voltage required to retain the VBAT register file	V_{POR_VBAT}	—	V	

1. All 5 V tolerant digital I/O pins are internally clamped to V_{SS} through an ESD protection diode. There is no diode connection to V_{DD}. If V_{IN} is less than V_{DIO_MIN}, a current limiting resistor is required. The negative DC injection current limiting resistor is calculated as $R=(V_{DIO_MIN}-V_{IN})/|I_{ICDIO}|$.
2. Analog pins are defined as pins that do not have an associated general purpose I/O port function. Additionally, EXTAL and XTAL are analog pins.
3. All analog pins are internally clamped to V_{SS} and V_{DD} through ESD protection diodes. If V_{IN} is less than V_{AIO_MIN} or greater than V_{AIO_MAX}, a current limiting resistor is required. The negative DC injection current limiting resistor is calculated as $R=(V_{AIO_MIN}-V_{IN})/|I_{ICAIO}|$. The positive injection current limiting resistor is calculated as $R=(V_{IN}-V_{AIO_MAX})/|I_{ICAIO}|$. Select the larger of these two calculated resistances if the pin is exposed to positive and negative injection currents.
4. Open drain outputs must be pulled to VDD.

5.2.2 LVD and POR operating requirements

Table 2. V_{DD} supply LVD and POR operating requirements

Symbol	Description	Min.	Typ.	Max.	Unit	Notes
V_{POR}	Falling VDD POR detect voltage	0.8	1.1	1.5	V	
V_{LVDH}	Falling low-voltage detect threshold — high range (LVDV=01)	2.48	2.56	2.64	V	
	Low-voltage warning thresholds — high range					1
V_{LVW1H}	• Level 1 falling (LVWV=00)	2.62	2.70	2.78	V	
V_{LVW2H}	• Level 2 falling (LVWV=01)	2.72	2.80	2.88	V	
V_{LVW3H}	• Level 3 falling (LVWV=10)	2.82	2.90	2.98	V	
V_{LVW4H}	• Level 4 falling (LVWV=11)	2.92	3.00	3.08	V	
V_{HYSH}	Low-voltage inhibit reset/recover hysteresis — high range	—	±80	—	mV	
V_{LVDL}	Falling low-voltage detect threshold — low range (LVDV=00)	1.54	1.60	1.66	V	
	Low-voltage warning thresholds — low range					1
V_{LVW1L}	• Level 1 falling (LVWV=00)	1.74	1.80	1.86	V	
V_{LVW2L}	• Level 2 falling (LVWV=01)	1.84	1.90	1.96	V	
V_{LVW3L}	• Level 3 falling (LVWV=10)	1.94	2.00	2.06	V	
V_{LVW4L}	• Level 4 falling (LVWV=11)	2.04	2.10	2.16	V	
V_{HYSL}	Low-voltage inhibit reset/recover hysteresis — low range	—	±60	—	mV	
V_{BG}	Bandgap voltage reference	0.97	1.00	1.03	V	
t_{LPO}	Internal low power oscillator period — factory trimmed	900	1000	1100	μs	

1. Rising thresholds are falling threshold + hysteresis voltage

Table 3. VBAT power operating requirements

Symbol	Description	Min.	Typ.	Max.	Unit	Notes
V_{POR_VBAT}	Falling VBAT supply POR detect voltage	0.8	1.1	1.5	V	

5.2.3 Voltage and current operating behaviors

Table 4. Voltage and current operating behaviors

Symbol	Description	Min.	Typ.[1]	Max.	Unit	Notes
V_{OH}	Output high voltage — high drive strength					
	• 2.7 V ≤ V_{DD} ≤ 3.6 V, I_{OH} = -9mA	V_{DD} – 0.5	—	—	V	
	• 1.71 V ≤ V_{DD} ≤ 2.7 V, I_{OH} = -3mA	V_{DD} – 0.5	—	—	V	
	Output high voltage — low drive strength					
	• 2.7 V ≤ V_{DD} ≤ 3.6 V, I_{OH} = -2mA	V_{DD} – 0.5	—	—	V	
	• 1.71 V ≤ V_{DD} ≤ 2.7 V, I_{OH} = -0.6mA	V_{DD} – 0.5	—	—	V	
I_{OHT}	Output high current total for all ports	—	—	100	mA	
V_{OL}	Output low voltage — high drive strength					2
	• 2.7 V ≤ V_{DD} ≤ 3.6 V, I_{OL} = 10mA	—	—	0.5	V	
	• 1.71 V ≤ V_{DD} ≤ 2.7 V, I_{OL} = 5mA	—	—	0.5	V	
	Output low voltage — low drive strength					
	• 2.7 V ≤ V_{DD} ≤ 3.6 V, I_{OL} = 2mA	—	—	0.5	V	
	• 1.71 V ≤ V_{DD} ≤ 2.7 V, I_{OL} = 1mA	—	—	0.5	V	
I_{OLT}	Output low current total for all ports	—	—	100	mA	
I_{INA}	Input leakage current, analog pins and digital pins configured as analog inputs					3, 4
	• V_{SS} ≤ V_{IN} ≤ V_{DD}					
	• All pins except EXTAL32, XTAL32, EXTAL, XTAL	—	0.002	0.5	μA	
	• EXTAL (PTA18) and XTAL (PTA19)	—	0.004	1.5	μA	
	• EXTAL32, XTAL32	—	0.075	10	μA	
I_{IND}	Input leakage current, digital pins					4, 5
	• V_{SS} ≤ V_{IN} ≤ V_{IL}					
	• All digital pins	—	0.002	0.5	μA	
	• V_{IN} = V_{DD}					
	• All digital pins except PTD7	—	0.002	0.5	μA	
	• PTD7	—	0.004	1	μA	
I_{IND}	Input leakage current, digital pins					4, 5, 6
	• V_{IL} < V_{IN} < V_{DD}					
	• V_{DD} = 3.6 V	—	18	26	μA	
	• V_{DD} = 3.0 V	—	12	49	μA	
	• V_{DD} = 2.5 V	—	8	13	μA	
	• V_{DD} = 1.7 V	—	3	6	μA	

Table continues on the next page...

Table 4. Voltage and current operating behaviors (continued)

Symbol	Description	Min.	Typ.[1]	Max.	Unit	Notes
I_{IND}	Input leakage current, digital pins • $V_{DD} < V_{IN} < 5.5$ V	—	1	50	μA	4, 5
Z_{IND}	Input impedance examples, digital pins • $V_{DD} = 3.6$ V • $V_{DD} = 3.0$ V • $V_{DD} = 2.5$ V • $V_{DD} = 1.7$ V	 — — — —	 — — — —	 48 55 57 85	 kΩ kΩ kΩ kΩ	4, 7
R_{PU}	Internal pullup resistors	20	35	50	kΩ	8
R_{PD}	Internal pulldown resistors	20	35	50	kΩ	9

1. Typical values characterized at 25°C and VDD = 3.6 V unless otherwise noted.
2. Open drain outputs must be pulled to V_{DD}.
3. Analog pins are defined as pins that do not have an associated general purpose I/O port function.
4. Digital pins have an associated GPIO port function and have 5V tolerant inputs, except EXTAL and XTAL.
5. Internal pull-up/pull-down resistors disabled.
6. Characterized, not tested in production.
7. Examples calculated using V_{IL} relation, V_{DD}, and max I_{IND}: $Z_{IND}=V_{IL}/I_{IND}$. This is the impedance needed to pull a high signal to a level below V_{IL} due to leakage when $V_{IL} < V_{IN} < V_{DD}$. These examples assume signal source low = 0 V.
8. Measured at V_{DD} supply voltage = V_{DD} min and Vinput = V_{SS}
9. Measured at V_{DD} supply voltage = V_{DD} min and Vinput = V_{DD}

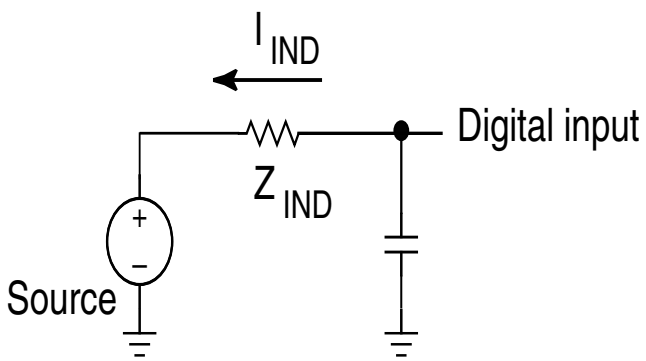

5.2.4 Power mode transition operating behaviors

All specifications except t_{POR}, and VLLSx→RUN recovery times in the following table assume this clock configuration:

- CPU and system clocks = 100 MHz
- Bus clock = 50 MHz
- FlexBus clock = 50 MHz
- Flash clock = 25 MHz
- MCG mode: FEI

Table 5. Power mode transition operating behaviors

Symbol	Description	Min.	Max.	Unit	Notes
t_{POR}	After a POR event, amount of time from the point V_{DD} reaches 1.71 V to execution of the first instruction across the operating temperature range of the chip. • V_{DD} slew rate ≥ 5.7 kV/s • V_{DD} slew rate < 5.7 kV/s	— —	300 1.7 V / (V_{DD} slew rate)	µs	1
	• VLLS1 → RUN	—	130	µs	
	• VLLS2 → RUN	—	92	µs	
	• VLLS3 → RUN	—	92	µs	
	• LLS → RUN	—	5.9	µs	
	• VLPS → RUN	—	5.0	µs	
	• STOP → RUN	—	5.0	µs	

1. Normal boot (FTFL_OPT[LPBOOT]=1)

5.2.5 Power consumption operating behaviors

Table 6. Power consumption operating behaviors

Symbol	Description	Min.	Typ.	Max.	Unit	Notes
I_{DDA}	Analog supply current	—	—	See note	mA	1
I_{DD_RUN}	Run mode current — all peripheral clocks disabled, code executing from flash • @ 1.8V • @ 3.0V	— —	37 38	63 64	mA mA	2
I_{DD_RUN}	Run mode current — all peripheral clocks enabled, code executing from flash • @ 1.8V • @ 3.0V • @ 25°C • @ 125°C	— — —	46 47 58	77 63 79	mA mA mA	3, 4
I_{DD_WAIT}	Wait mode high frequency current at 3.0 V — all peripheral clocks disabled	—	20	—	mA	2
I_{DD_WAIT}	Wait mode reduced frequency current at 3.0 V — all peripheral clocks disabled	—	9	—	mA	5
I_{DD_VLPR}	Very-low-power run mode current at 3.0 V — all peripheral clocks disabled	—	1.12	—	mA	6

Table continues on the next page...

Table 6. Power consumption operating behaviors (continued)

Symbol	Description	Min.	Typ.	Max.	Unit	Notes
I_{DD_VLPR}	Very-low-power run mode current at 3.0 V — all peripheral clocks enabled	—	1.71	—	mA	7
I_{DD_VLPW}	Very-low-power wait mode current at 3.0 V — all peripheral clocks disabled	—	0.77	—	mA	8
I_{DD_STOP}	Stop mode current at 3.0 V					
	• @ –40 to 25°C	—	0.74	1.41	mA	
	• @ 70°C	—	2.45	11.5	mA	
	• @ 105°C	—	6.61	30	mA	
I_{DD_VLPS}	Very-low-power stop mode current at 3.0 V					
	• @ –40 to 25°C	—	83	435	μA	
	• @ 70°C	—	425	2000	μA	
	• @ 105°C	—	1280	4000	μA	
I_{DD_LLS}	Low leakage stop mode current at 3.0 V					9
	• @ –40 to 25°C	—	4.58	19.9	μA	
	• @ 70°C	—	30.6	105	μA	
	• @ 105°C	—	137	500	μA	
I_{DD_VLLS3}	Very low-leakage stop mode 3 current at 3.0 V					9
	• @ –40 to 25°C	—	3.0	23	μA	
	• @ 70°C	—	18.6	43	μA	
	• @ 105°C	—	84.9	230	μA	
I_{DD_VLLS2}	Very low-leakage stop mode 2 current at 3.0 V					
	• @ –40 to 25°C	—	2.2	5.4	μA	
	• @ 70°C	—	9.3	35	μA	
	• @ 105°C	—	41.4	128	μA	
I_{DD_VLLS1}	Very low-leakage stop mode 1 current at 3.0 V					
	• @ –40 to 25°C	—	2.1	9	μA	
	• @ 70°C	—	7.6	28	μA	
	• @ 105°C	—	33.5	95.5	μA	
I_{DD_VBAT}	Average current with RTC and 32kHz disabled at 3.0 V					
	• @ –40 to 25°C	—	0.19	0.22	μA	
	• @ 70°C	—	0.49	0.64	μA	
	• @ 105°C	—	2.2	3.2	μA	

Table continues on the next page...

Table 6. Power consumption operating behaviors (continued)

Symbol	Description	Min.	Typ.	Max.	Unit	Notes
I_{DD_VBAT}	Average current when CPU is not accessing RTC registers					10
	• @ 1.8V					
	• @ –40 to 25°C	—	0.57	0.67	μA	
	• @ 70°C	—	0.90	1.2	μA	
	• @ 105°C	—	2.4	3.5	μA	
	• @ 3.0V					
	• @ –40 to 25°C	—	0.67	0.94	μA	
	• @ 70°C	—	1.0	1.4	μA	
	• @ 105°C	—	2.7	3.9	μA	

1. The analog supply current is the sum of the active or disabled current for each of the analog modules on the device. See each module's specification for its supply current.
2. 100MHz core and system clock, 50MHz bus and FlexBus clock, and 25MHz flash clock . MCG configured for FEI mode. All peripheral clocks disabled.
3. 100MHz core and system clock, 50MHz bus and FlexBus clock, and 25MHz flash clock. MCG configured for FEI mode. All peripheral clocks enabled.
4. Max values are measured with CPU executing DSP instructions.
5. 25MHz core and system clock, 25MHz bus clock, and 12.5MHz FlexBus and flash clock. MCG configured for FEI mode.
6. 4 MHz core, system, FlexBus, and bus clock and 1MHz flash clock. MCG configured for BLPE mode. All peripheral clocks disabled. Code executing from flash.
7. 4 MHz core, system, FlexBus, and bus clock and 1MHz flash clock. MCG configured for BLPE mode. All peripheral clocks enabled but peripherals are not in active operation. Code executing from flash.
8. 4 MHz core, system, FlexBus, and bus clock and 1MHz flash clock. MCG configured for BLPE mode. All peripheral clocks disabled.
9. Data reflects devices with 128 KB of RAM. For devices with 64 KB of RAM, power consumption is reduced by 2 μA.
10. Includes 32kHz oscillator current and RTC operation.

5.2.5.1 Diagram: Typical IDD_RUN operating behavior

The following data was measured under these conditions:

- MCG in FBE mode for 50 MHz and lower frequencies. MCG in FEE mode at greater than 50 MHz frequencies.
- USB regulator disabled
- No GPIOs toggled
- Code execution from flash with cache enabled
- For the ALLOFF curve, all peripheral clocks are disabled except FTFL

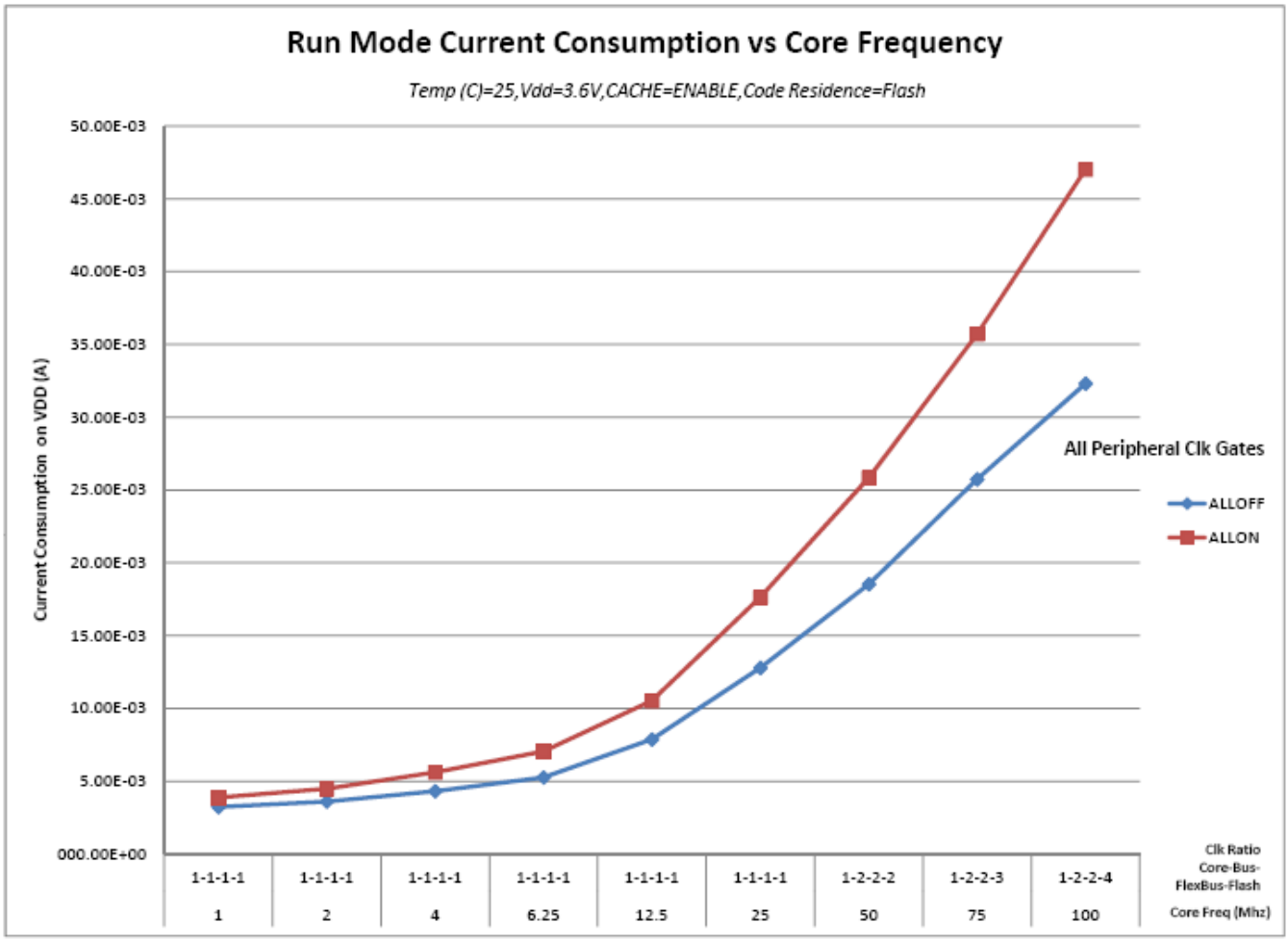

Figure 2. Run mode supply current vs. core frequency

5.2.6 EMC radiated emissions operating behaviors

Table 7. EMC radiated emissions operating behaviors for 144LQFP and 144MAPBGA

Symbol	Description	Frequency band (MHz)	144LQFP	144MAPBGA	Unit	Notes
V_{RE1}	Radiated emissions voltage, band 1	0.15–50	23	12	dBµV	1, 2
V_{RE2}	Radiated emissions voltage, band 2	50–150	27	24	dBµV	
V_{RE3}	Radiated emissions voltage, band 3	150–500	28	27	dBµV	
V_{RE4}	Radiated emissions voltage, band 4	500–1000	14	11	dBµV	
V_{RE_IEC}	IEC level	0.15–1000	K	K	—	2, 3

1. Determined according to IEC Standard 61967-1, *Integrated Circuits - Measurement of Electromagnetic Emissions, 150 kHz to 1 GHz Part 1: General Conditions and Definitions* and IEC Standard 61967-2, *Integrated Circuits - Measurement of Electromagnetic Emissions, 150 kHz to 1 GHz Part 2: Measurement of Radiated Emissions—TEM Cell and Wideband TEM Cell Method*. Measurements were made while the microcontroller was running basic application code. The reported emission level is the value of the maximum measured emission, rounded up to the next whole number, from among the measured orientations in each frequency range.

2. V_{DD} = 3.3 V, T_A = 25 °C, f_{OSC} = 12 MHz (crystal), f_{SYS} = 96 MHz, f_{BUS} = 48 MHz
3. Specified according to Annex D of IEC Standard 61967-2, *Measurement of Radiated Emissions—TEM Cell and Wideband TEM Cell Method*

5.2.7 Designing with radiated emissions in mind

To find application notes that provide guidance on designing your system to minimize interference from radiated emissions:

1. Go to www.freescale.com.
2. Perform a keyword search for "EMC design."

5.2.8 Capacitance attributes

Table 8. Capacitance attributes

Symbol	Description	Min.	Max.	Unit
C_{IN_A}	Input capacitance: analog pins	—	7	pF
C_{IN_D}	Input capacitance: digital pins	—	7	pF

5.3 Switching specifications

5.3.1 Device clock specifications

Table 9. Device clock specifications

Symbol	Description	Min.	Max.	Unit	Notes
	Normal run mode				
f_{SYS}	System and core clock	—	100	MHz	
f_{SYS_USB}	System and core clock when Full Speed USB in operation	20	—	MHz	
f_{BUS}	Bus clock	—	50	MHz	
FB_CLK	FlexBus clock	—	50	MHz	
f_{FLASH}	Flash clock	—	25	MHz	
f_{LPTMR}	LPTMR clock	—	25	MHz	
	VLPR mode[1]				
f_{SYS}	System and core clock	—	4	MHz	
f_{BUS}	Bus clock	—	4	MHz	
FB_CLK	FlexBus clock	—	4	MHz	
f_{FLASH}	Flash clock	—	1	MHz	

Table continues on the next page...

Table 9. Device clock specifications (continued)

Symbol	Description	Min.	Max.	Unit	Notes
f_{ERCLK}	External reference clock	—	16	MHz	
f_{LPTMR_pin}	LPTMR clock	—	25	MHz	
f_{LPTMR_ERCLK}	LPTMR external reference clock	—	16	MHz	
$f_{FlexCAN_ERCLK}$	FlexCAN external reference clock	—	8	MHz	
f_{I2S_MCLK}	I2S master clock	—	12.5	MHz	
f_{I2S_BCLK}	I2S bit clock	—	4	MHz	

1. The frequency limitations in VLPR mode here override any frequency specification listed in the timing specification for any other module.

5.3.2 General switching specifications

These general purpose specifications apply to all signals configured for GPIO, UART, CAN, CMT, and I^2C signals.

Table 10. General switching specifications

Symbol	Description	Min.	Max.	Unit	Notes
	GPIO pin interrupt pulse width (digital glitch filter disabled) — Synchronous path	1.5	—	Bus clock cycles	1, 2
	GPIO pin interrupt pulse width (digital glitch filter disabled, analog filter enabled) — Asynchronous path	100	—	ns	3
	GPIO pin interrupt pulse width (digital glitch filter disabled, analog filter disabled) — Asynchronous path	16	—	ns	3
	External reset pulse width (digital glitch filter disabled)	100	—	ns	3
	Mode select ($\overline{EZP_CS}$) hold time after reset deassertion	2	—	Bus clock cycles	
	Port rise and fall time (high drive strength)				4
	• Slew disabled				
	• $1.71 \le V_{DD} \le 2.7V$	—	12	ns	
	• $2.7 \le V_{DD} \le 3.6V$	—	6	ns	
	• Slew enabled				
	• $1.71 \le V_{DD} \le 2.7V$	—	36	ns	
	• $2.7 \le V_{DD} \le 3.6V$	—	24	ns	

Table continues on the next page...

Table 10. General switching specifications (continued)

Symbol	Description	Min.	Max.	Unit	Notes
	Port rise and fall time (low drive strength)				5
	• Slew disabled				
	• $1.71 \le V_{DD} \le 2.7V$	—	12	ns	
	• $2.7 \le V_{DD} \le 3.6V$	—	6	ns	
	• Slew enabled				
	• $1.71 \le V_{DD} \le 2.7V$	—	36	ns	
	• $2.7 \le V_{DD} \le 3.6V$	—	24	ns	

1. This is the minimum pulse width that is guaranteed to pass through the pin synchronization circuitry. Shorter pulses may or may not be recognized. In Stop, VLPS, LLS, and VLLSx modes, the synchronizer is bypassed so shorter pulses can be recognized in that case.
2. The greater synchronous and asynchronous timing must be met.
3. This is the minimum pulse width that is guaranteed to be recognized as a pin interrupt request in Stop, VLPS, LLS, and VLLSx modes.
4. 75 pF load
5. 15 pF load

5.4 Thermal specifications

5.4.1 Thermal operating requirements

Table 11. Thermal operating requirements

Symbol	Description	Min.	Max.	Unit
T_J	Die junction temperature	–40	125	°C
T_A	Ambient temperature	–40	105	°C

5.4.2 Thermal attributes

Board type	Symbol	Description	80 LQFP	Unit	Notes
Single-layer (1s)	$R_{\theta JA}$	Thermal resistance, junction to ambient (natural convection)	50	°C/W	1
Four-layer (2s2p)	$R_{\theta JA}$	Thermal resistance, junction to ambient (natural convection)	35	°C/W	1

Table continues on the next page...

Board type	Symbol	Description	80 LQFP	Unit	Notes
Single-layer (1s)	$R_{\theta JMA}$	Thermal resistance, junction to ambient (200 ft./ min. air speed)	39	°C/W	1
Four-layer (2s2p)	$R_{\theta JMA}$	Thermal resistance, junction to ambient (200 ft./ min. air speed)	29	°C/W	1
—	$R_{\theta JB}$	Thermal resistance, junction to board	19	°C/W	2
—	$R_{\theta JC}$	Thermal resistance, junction to case	8	°C/W	3
—	Ψ_{JT}	Thermal characterization parameter, junction to package top outside center (natural convection)	2	°C/W	4

1. Determined according to JEDEC Standard JESD51-2, *Integrated Circuits Thermal Test Method Environmental Conditions—Natural Convection (Still Air)*, or EIA/JEDEC Standard JESD51-6, *Integrated Circuit Thermal Test Method Environmental Conditions—Forced Convection (Moving Air)*.
2. Determined according to JEDEC Standard JESD51-8, *Integrated Circuit Thermal Test Method Environmental Conditions—Junction-to-Board*.
3. Determined according to Method 1012.1 of MIL-STD 883, *Test Method Standard, Microcircuits*, with the cold plate temperature used for the case temperature. The value includes the thermal resistance of the interface material between the top of the package and the cold plate.
4. Determined according to JEDEC Standard JESD51-2, *Integrated Circuits Thermal Test Method Environmental Conditions—Natural Convection (Still Air)*.

6 Peripheral operating requirements and behaviors

6.1 Core modules

6.1.1 Debug trace timing specifications

Table 12. Debug trace operating behaviors

Symbol	Description	Min.	Max.	Unit
T_{cyc}	Clock period	Frequency dependent		MHz
T_{wl}	Low pulse width	2	—	ns
T_{wh}	High pulse width	2	—	ns
T_r	Clock and data rise time	—	3	ns

Table continues on the next page...

Table 12. Debug trace operating behaviors (continued)

Symbol	Description	Min.	Max.	Unit
T_f	Clock and data fall time	—	3	ns
T_s	Data setup	3	—	ns
T_h	Data hold	2	—	ns

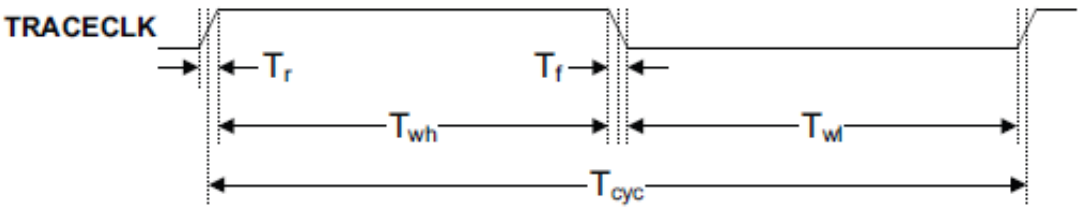

Figure 3. TRACE_CLKOUT specifications

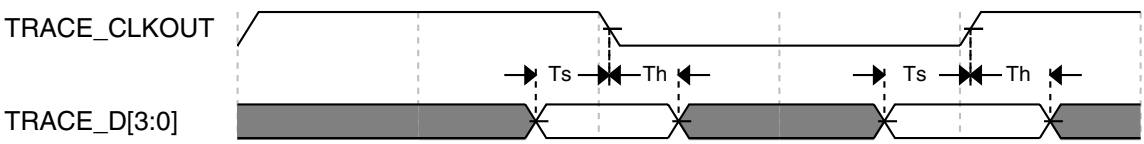

Figure 4. Trace data specifications

6.1.2 JTAG electricals

Table 13. JTAG limited voltage range electricals

Symbol	Description	Min.	Max.	Unit
	Operating voltage	2.7	3.6	V
J1	TCLK frequency of operation			MHz
	• Boundary Scan	0	10	
	• JTAG and CJTAG	0	25	
	• Serial Wire Debug	0	50	
J2	TCLK cycle period	1/J1	—	ns
J3	TCLK clock pulse width			
	• Boundary Scan	50	—	ns
	• JTAG and CJTAG	20	—	ns
	• Serial Wire Debug	10	—	ns
J4	TCLK rise and fall times	—	3	ns
J5	Boundary scan input data setup time to TCLK rise	20	—	ns

Table continues on the next page...

Table 13. JTAG limited voltage range electricals (continued)

Symbol	Description	Min.	Max.	Unit
J6	Boundary scan input data hold time after TCLK rise	0	—	ns
J7	TCLK low to boundary scan output data valid	—	25	ns
J8	TCLK low to boundary scan output high-Z	—	25	ns
J9	TMS, TDI input data setup time to TCLK rise	8	—	ns
J10	TMS, TDI input data hold time after TCLK rise	1	—	ns
J11	TCLK low to TDO data valid	—	17	ns
J12	TCLK low to TDO high-Z	—	17	ns
J13	$\overline{\text{TRST}}$ assert time	100	—	ns
J14	$\overline{\text{TRST}}$ setup time (negation) to TCLK high	8	—	ns

Table 14. JTAG full voltage range electricals

Symbol	Description	Min.	Max.	Unit
	Operating voltage	1.71	3.6	V
J1	TCLK frequency of operation			MHz
	• Boundary Scan	0	10	
	• JTAG and CJTAG	0	20	
	• Serial Wire Debug	0	40	
J2	TCLK cycle period	1/J1	—	ns
J3	TCLK clock pulse width			
	• Boundary Scan	50	—	ns
	• JTAG and CJTAG	25	—	ns
	• Serial Wire Debug	12.5	—	ns
J4	TCLK rise and fall times	—	3	ns
J5	Boundary scan input data setup time to TCLK rise	20	—	ns
J6	Boundary scan input data hold time after TCLK rise	0	—	ns
J7	TCLK low to boundary scan output data valid	—	25	ns
J8	TCLK low to boundary scan output high-Z	—	25	ns
J9	TMS, TDI input data setup time to TCLK rise	8	—	ns
J10	TMS, TDI input data hold time after TCLK rise	1.4	—	ns
J11	TCLK low to TDO data valid	—	22.1	ns
J12	TCLK low to TDO high-Z	—	22.1	ns
J13	$\overline{\text{TRST}}$ assert time	100	—	ns
J14	$\overline{\text{TRST}}$ setup time (negation) to TCLK high	8	—	ns

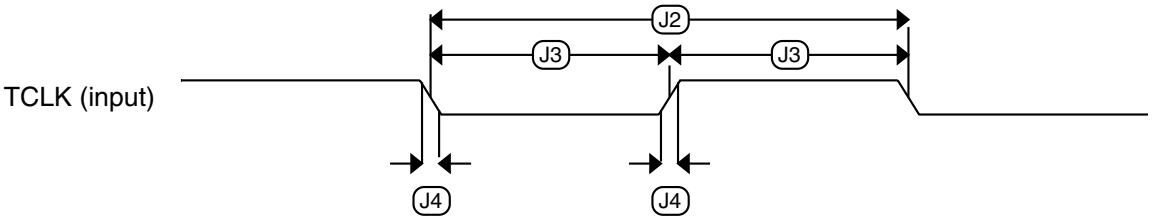

Figure 5. Test clock input timing

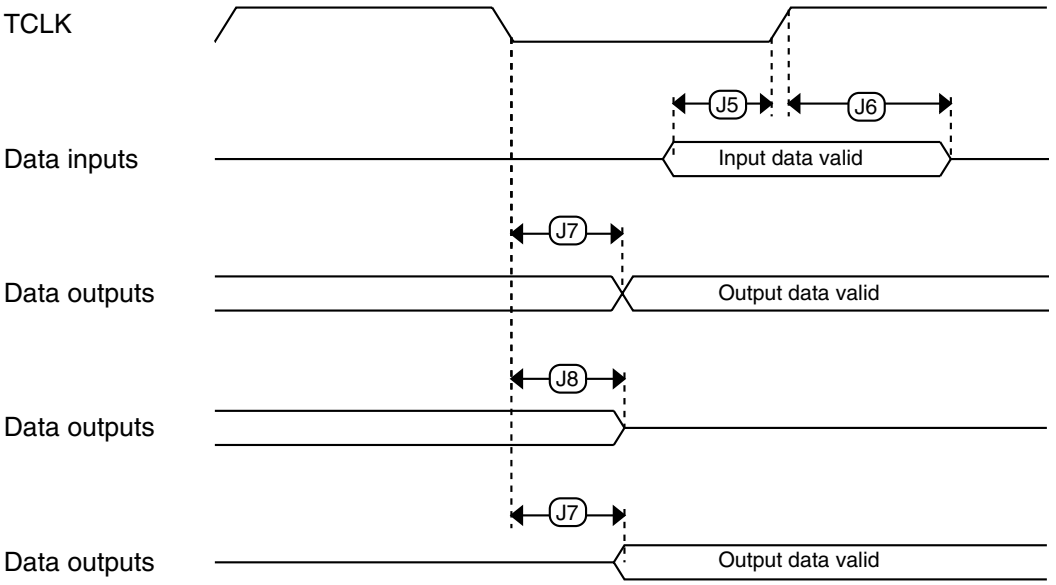

Figure 6. Boundary scan (JTAG) timing

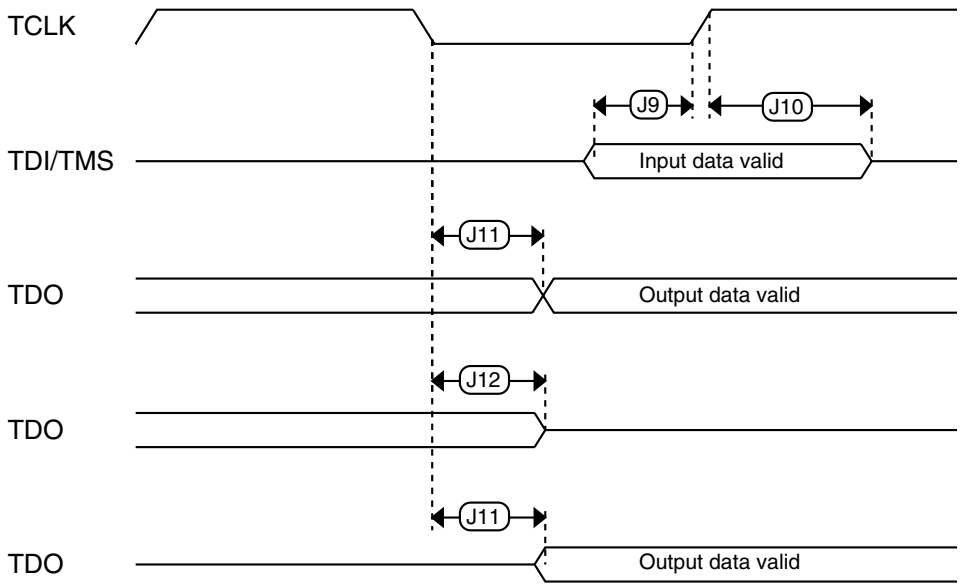

Figure 7. Test Access Port timing

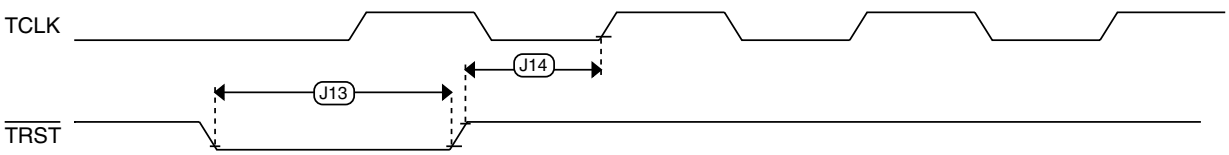

Figure 8. $\overline{\text{TRST}}$ timing

6.2 System modules

There are no specifications necessary for the device's system modules.

6.3 Clock modules

6.3.1 MCG specifications

Table 15. MCG specifications

Symbol	Description		Min.	Typ.	Max.	Unit	Notes
f_{ints_ft}	Internal reference frequency (slow clock) — factory trimmed at nominal VDD and 25 °C		—	32.768	—	kHz	
f_{ints_t}	Internal reference frequency (slow clock) — user trimmed		31.25	—	39.0625	kHz	
$\Delta_{fdco_res_t}$	Resolution of trimmed average DCO output frequency at fixed voltage and temperature — using SCTRIM and SCFTRIM		—	± 0.3	± 0.6	$\%f_{dco}$	1
$\Delta f_{dco_res_t}$	Resolution of trimmed average DCO output frequency at fixed voltage and temperature — using SCTRIM only		—	± 0.2	± 0.5	$\%f_{dco}$	1
Δf_{dco_t}	Total deviation of trimmed average DCO output frequency over voltage and temperature		—	+0.5/-0.7	± 3	$\%f_{dco}$	1,
Δf_{dco_t}	Total deviation of trimmed average DCO output frequency over fixed voltage and temperature range of 0–70°C		—	± 0.3	± 3	$\%f_{dco}$	1
f_{intf_ft}	Internal reference frequency (fast clock) — factory trimmed at nominal VDD and 25°C		—	4	—	MHz	
f_{intf_t}	Internal reference frequency (fast clock) — user trimmed at nominal VDD and 25 °C		3	—	5	MHz	
f_{loc_low}	Loss of external clock minimum frequency — RANGE = 00		(3/5) x f_{ints_t}	—	—	kHz	
f_{loc_high}	Loss of external clock minimum frequency — RANGE = 01, 10, or 11		(16/5) x f_{ints_t}	—	—	kHz	
FLL							
f_{fll_ref}	FLL reference frequency range		31.25	—	39.0625	kHz	
f_{dco}	DCO output frequency range	Low range (DRS=00) $640 \times f_{fll_ref}$	20	20.97	25	MHz	2, 3
		Mid range (DRS=01) $1280 \times f_{fll_ref}$	40	41.94	50	MHz	
		Mid-high range (DRS=10) $1920 \times f_{fll_ref}$	60	62.91	75	MHz	
		High range (DRS=11) $2560 \times f_{fll_ref}$	80	83.89	100	MHz	
$f_{dco_t_DMX32}$	DCO output frequency	Low range (DRS=00) $732 \times f_{fll_ref}$	—	23.99	—	MHz	4, 5
		Mid range (DRS=01) $1464 \times f_{fll_ref}$	—	47.97	—	MHz	
		Mid-high range (DRS=10) $2197 \times f_{fll_ref}$	—	71.99	—	MHz	
		High range (DRS=11) $2929 \times f_{fll_ref}$	—	95.98	—	MHz	

Table continues on the next page...

Table 15. MCG specifications (continued)

Symbol	Description	Min.	Typ.	Max.	Unit	Notes
J_{cyc_fll}	FLL period jitter • f_{DCO} = 48 MHz • f_{DCO} = 98 MHz	— —	180 150	— —	ps	
$t_{fll_acquire}$	FLL target frequency acquisition time	—	—	1	ms	6
PLL						
f_{vco}	VCO operating frequency	48.0	—	100	MHz	
I_{pll}	PLL operating current • PLL @ 96 MHz ($f_{osc_hi_1}$ = 8 MHz, f_{pll_ref} = 2 MHz, VDIV multiplier = 48)	—	1060	—	μA	7
I_{pll}	PLL operating current • PLL @ 48 MHz ($f_{osc_hi_1}$ = 8 MHz, f_{pll_ref} = 2 MHz, VDIV multiplier = 24)	—	600	—	μA	7
f_{pll_ref}	PLL reference frequency range	2.0	—	4.0	MHz	
J_{cyc_pll}	PLL period jitter (RMS) • f_{vco} = 48 MHz • f_{vco} = 100 MHz	— —	120 50	— —	ps ps	8
J_{acc_pll}	PLL accumulated jitter over 1μs (RMS) • f_{vco} = 48 MHz • f_{vco} = 100 MHz	— —	1350 600	— —	ps ps	8
D_{lock}	Lock entry frequency tolerance	± 1.49	—	± 2.98	%	
D_{unl}	Lock exit frequency tolerance	± 4.47	—	± 5.97	%	
t_{pll_lock}	Lock detector detection time	—	—	$150 \times 10^{-6} + 1075(1/f_{pll_ref})$	s	9

1. This parameter is measured with the internal reference (slow clock) being used as a reference to the FLL (FEI clock mode).
2. These typical values listed are with the slow internal reference clock (FEI) using factory trim and DMX32=0.
3. The resulting system clock frequencies should not exceed their maximum specified values. The DCO frequency deviation (Δf_{dco_t}) over voltage and temperature should be considered.
4. These typical values listed are with the slow internal reference clock (FEI) using factory trim and DMX32=1.
5. The resulting clock frequency must not exceed the maximum specified clock frequency of the device.
6. This specification applies to any time the FLL reference source or reference divider is changed, trim value is changed, DMX32 bit is changed, DRS bits are changed, or changing from FLL disabled (BLPE, BLPI) to FLL enabled (FEI, FEE, FBE, FBI). If a crystal/resonator is being used as the reference, this specification assumes it is already running.
7. Excludes any oscillator currents that are also consuming power while PLL is in operation.
8. This specification was obtained using a Freescale developed PCB. PLL jitter is dependent on the noise characteristics of each PCB and results will vary.
9. This specification applies to any time the PLL VCO divider or reference divider is changed, or changing from PLL disabled (BLPE, BLPI) to PLL enabled (PBE, PEE). If a crystal/resonator is being used as the reference, this specification assumes it is already running.

6.3.2 Oscillator electrical specifications

This section provides the electrical characteristics of the module.

6.3.2.1 Oscillator DC electrical specifications

Table 16. Oscillator DC electrical specifications

Symbol	Description	Min.	Typ.	Max.	Unit	Notes
V_{DD}	Supply voltage	1.71	—	3.6	V	
I_{DDOSC}	Supply current — low-power mode (HGO=0)					1
	• 32 kHz	—	500	—	nA	
	• 4 MHz	—	200	—	μA	
	• 8 MHz (RANGE=01)	—	300	—	μA	
	• 16 MHz	—	950	—	μA	
	• 24 MHz	—	1.2	—	mA	
	• 32 MHz	—	1.5	—	mA	
I_{DDOSC}	Supply current — high gain mode (HGO=1)					1
	• 32 kHz	—	25	—	μA	
	• 4 MHz	—	400	—	μA	
	• 8 MHz (RANGE=01)	—	500	—	μA	
	• 16 MHz	—	2.5	—	mA	
	• 24 MHz	—	3	—	mA	
	• 32 MHz	—	4	—	mA	
C_x	EXTAL load capacitance	—	—	—		2, 3
C_y	XTAL load capacitance	—	—	—		2, 3
R_F	Feedback resistor — low-frequency, low-power mode (HGO=0)	—	—	—	MΩ	2, 4
	Feedback resistor — low-frequency, high-gain mode (HGO=1)	—	10	—	MΩ	
	Feedback resistor — high-frequency, low-power mode (HGO=0)	—	—	—	MΩ	
	Feedback resistor — high-frequency, high-gain mode (HGO=1)	—	1	—	MΩ	
R_S	Series resistor — low-frequency, low-power mode (HGO=0)	—	—	—	kΩ	
	Series resistor — low-frequency, high-gain mode (HGO=1)	—	200	—	kΩ	
	Series resistor — high-frequency, low-power mode (HGO=0)	—	—	—	kΩ	
	Series resistor — high-frequency, high-gain mode (HGO=1)	—	0	—	kΩ	

Table continues on the next page...

Table 16. Oscillator DC electrical specifications (continued)

Symbol	Description	Min.	Typ.	Max.	Unit	Notes
V_{pp}[5]	Peak-to-peak amplitude of oscillation (oscillator mode) — low-frequency, low-power mode (HGO=0)	—	0.6	—	V	
	Peak-to-peak amplitude of oscillation (oscillator mode) — low-frequency, high-gain mode (HGO=1)	—	V_{DD}	—	V	
	Peak-to-peak amplitude of oscillation (oscillator mode) — high-frequency, low-power mode (HGO=0)	—	0.6	—	V	
	Peak-to-peak amplitude of oscillation (oscillator mode) — high-frequency, high-gain mode (HGO=1)	—	V_{DD}	—	V	

1. V_{DD}=3.3 V, Temperature =25 °C
2. See crystal or resonator manufacturer's recommendation
3. C_x,C_y can be provided by using either the integrated capacitors or by using external components.
4. When low power mode is selected, R_F is integrated and must not be attached externally.
5. The EXTAL and XTAL pins should only be connected to required oscillator components and must not be connected to any other devices.

6.3.2.2 Oscillator frequency specifications

Table 17. Oscillator frequency specifications

Symbol	Description	Min.	Typ.	Max.	Unit	Notes
f_{osc_lo}	Oscillator crystal or resonator frequency — low frequency mode (MCG_C2[RANGE]=00)	32	—	40	kHz	
$f_{osc_hi_1}$	Oscillator crystal or resonator frequency — high frequency mode (low range) (MCG_C2[RANGE]=01)	3	—	8	MHz	
$f_{osc_hi_2}$	Oscillator crystal or resonator frequency — high frequency mode (high range) (MCG_C2[RANGE]=1x)	8	—	32	MHz	
f_{ec_extal}	Input clock frequency (external clock mode)	—	—	50	MHz	1, 2
t_{dc_extal}	Input clock duty cycle (external clock mode)	40	50	60	%	
t_{cst}	Crystal startup time — 32 kHz low-frequency, low-power mode (HGO=0)	—	750	—	ms	3, 4
	Crystal startup time — 32 kHz low-frequency, high-gain mode (HGO=1)	—	250	—	ms	
	Crystal startup time — 8 MHz high-frequency (MCG_C2[RANGE]=01), low-power mode (HGO=0)	—	0.6	—	ms	
	Crystal startup time — 8 MHz high-frequency (MCG_C2[RANGE]=01), high-gain mode (HGO=1)	—	1	—	ms	

1. Other frequency limits may apply when external clock is being used as a reference for the FLL or PLL.
2. When transitioning from FBE to FEI mode, restrict the frequency of the input clock so that, when it is divided by FRDIV, it remains within the limits of the DCO input clock frequency.
3. Proper PC board layout procedures must be followed to achieve specifications.

4. Crystal startup time is defined as the time between the oscillator being enabled and the OSCINIT bit in the MCG_S register being set.

NOTE

The 32 kHz oscillator works in low power mode by default and cannot be moved into high power/gain mode.

6.3.3 32 kHz oscillator electrical characteristics

This section describes the module electrical characteristics.

6.3.3.1 32 kHz oscillator DC electrical specifications

Table 18. 32kHz oscillator DC electrical specifications

Symbol	Description	Min.	Typ.	Max.	Unit
V_{BAT}	Supply voltage	1.71	—	3.6	V
R_F	Internal feedback resistor	—	100	—	MΩ
C_{para}	Parasitical capacitance of EXTAL32 and XTAL32	—	5	7	pF
V_{pp}[1]	Peak-to-peak amplitude of oscillation	—	0.6	—	V

1. When a crystal is being used with the 32 kHz oscillator, the EXTAL32 and XTAL32 pins should only be connected to required oscillator components and must not be connected to any other devices.

6.3.3.2 32 kHz oscillator frequency specifications

Table 19. 32 kHz oscillator frequency specifications

Symbol	Description	Min.	Typ.	Max.	Unit	Notes
f_{osc_lo}	Oscillator crystal	—	32.768	—	kHz	
t_{start}	Crystal start-up time	—	1000	—	ms	1
$f_{ec_extal32}$	Externally provided input clock frequency	—	32.768	—	kHz	2
$v_{ec_extal32}$	Externally provided input clock amplitude	700	—	V_{BAT}	mV	2, 3

1. Proper PC board layout procedures must be followed to achieve specifications.
2. This specification is for an externally supplied clock driven to EXTAL32 and does not apply to any other clock input. The oscillator remains enabled and XTAL32 must be left unconnected.
3. The parameter specified is a peak-to-peak value and V_{IH} and V_{IL} specifications do not apply. The voltage of the applied clock must be within the range of V_{SS} to V_{BAT}.

6.4 Memories and memory interfaces

6.4.1 Flash electrical specifications

This section describes the electrical characteristics of the flash memory module.

6.4.1.1 Flash timing specifications — program and erase

The following specifications represent the amount of time the internal charge pumps are active and do not include command overhead.

Table 20. NVM program/erase timing specifications

Symbol	Description	Min.	Typ.	Max.	Unit	Notes
t_{hvpgm4}	Longword Program high-voltage time	—	7.5	18	μs	
$t_{hversscr}$	Sector Erase high-voltage time	—	13	113	ms	1
$t_{hversblk256k}$	Erase Block high-voltage time for 256 KB	—	104	904	ms	1

1. Maximum time based on expectations at cycling end-of-life.

6.4.1.2 Flash timing specifications — commands

Table 21. Flash command timing specifications

Symbol	Description	Min.	Typ.	Max.	Unit	Notes
$t_{rd1blk256k}$	Read 1s Block execution time • 256 KB program/data flash	—	—	1.7	ms	
$t_{rd1sec2k}$	Read 1s Section execution time (flash sector)	—	—	60	μs	1
t_{pgmchk}	Program Check execution time	—	—	45	μs	1
t_{rdrsrc}	Read Resource execution time	—	—	30	μs	1
t_{pgm4}	Program Longword execution time	—	65	145	μs	
$t_{ersblk256k}$	Erase Flash Block execution time • 256 KB program/data flash	—	122	985	ms	2
t_{ersscr}	Erase Flash Sector execution time	—	14	114	ms	2
	Program Section execution time					
$t_{pgmsec512}$	• 512 bytes flash	—	2.4	—	ms	
$t_{pgmsec1k}$	• 1 KB flash	—	4.7	—	ms	
$t_{pgmsec2k}$	• 2 KB flash	—	9.3	—	ms	
t_{rd1all}	Read 1s All Blocks execution time	—	—	1.8	ms	
t_{rdonce}	Read Once execution time	—	—	25	μs	1
$t_{pgmonce}$	Program Once execution time	—	65	—	μs	
t_{ersall}	Erase All Blocks execution time	—	250	2000	ms	2
t_{vfykey}	Verify Backdoor Access Key execution time	—	—	30	μs	1

Table continues on the next page...

Table 21. Flash command timing specifications (continued)

Symbol	Description	Min.	Typ.	Max.	Unit	Notes
	Swap Control execution time					
$t_{swapx01}$	• control code 0x01	—	200	—	μs	
$t_{swapx02}$	• control code 0x02	—	70	150	μs	
$t_{swapx04}$	• control code 0x04	—	70	150	μs	
$t_{swapx08}$	• control code 0x08	—	—	30	μs	

1. Assumes 25 MHz flash clock frequency.
2. Maximum times for erase parameters based on expectations at cycling end-of-life.

6.4.1.3 Flash high voltage current behaviors

Table 22. Flash high voltage current behaviors

Symbol	Description	Min.	Typ.	Max.	Unit
I_{DD_PGM}	Average current adder during high voltage flash programming operation	—	2.5	6.0	mA
I_{DD_ERS}	Average current adder during high voltage flash erase operation	—	1.5	4.0	mA

6.4.1.4 Reliability specifications

Table 23. NVM reliability specifications

Symbol	Description	Min.	Typ.[1]	Max.	Unit	Notes
	Program Flash					
$t_{nvmretp10k}$	Data retention after up to 10 K cycles	5	50	—	years	
$t_{nvmretp1k}$	Data retention after up to 1 K cycles	20	100	—	years	
$n_{nvmcycp}$	Cycling endurance	10 K	50 K	—	cycles	2

1. Typical data retention values are based on measured response accelerated at high temperature and derated to a constant 25°C use profile. Engineering Bulletin EB618 does not apply to this technology. Typical endurance defined in Engineering Bulletin EB619.
2. Cycling endurance represents number of program/erase cycles at -40°C ≤ T_j ≤ 125°C.

6.4.2 EzPort switching specifications

Table 24. EzPort switching specifications

Num	Description	Min.	Max.	Unit
	Operating voltage	1.71	3.6	V
EP1	EZP_CK frequency of operation (all commands except READ)	—	$f_{SYS}/2$	MHz

Table continues on the next page...

Table 24. EzPort switching specifications (continued)

Num	Description	Min.	Max.	Unit
EP1a	EZP_CK frequency of operation (READ command)	—	$f_{SYS}/8$	MHz
EP2	$\overline{\text{EZP_CS}}$ negation to next $\overline{\text{EZP_CS}}$ assertion	2 x t_{EZP_CK}	—	ns
EP3	$\overline{\text{EZP_CS}}$ input valid to EZP_CK high (setup)	5	—	ns
EP4	EZP_CK high to $\overline{\text{EZP_CS}}$ input invalid (hold)	5	—	ns
EP5	EZP_D input valid to EZP_CK high (setup)	2	—	ns
EP6	EZP_CK high to EZP_D input invalid (hold)	5	—	ns
EP7	EZP_CK low to EZP_Q output valid	—	16	ns
EP8	EZP_CK low to EZP_Q output invalid (hold)	0	—	ns
EP9	$\overline{\text{EZP_CS}}$ negation to EZP_Q tri-state	—	12	ns

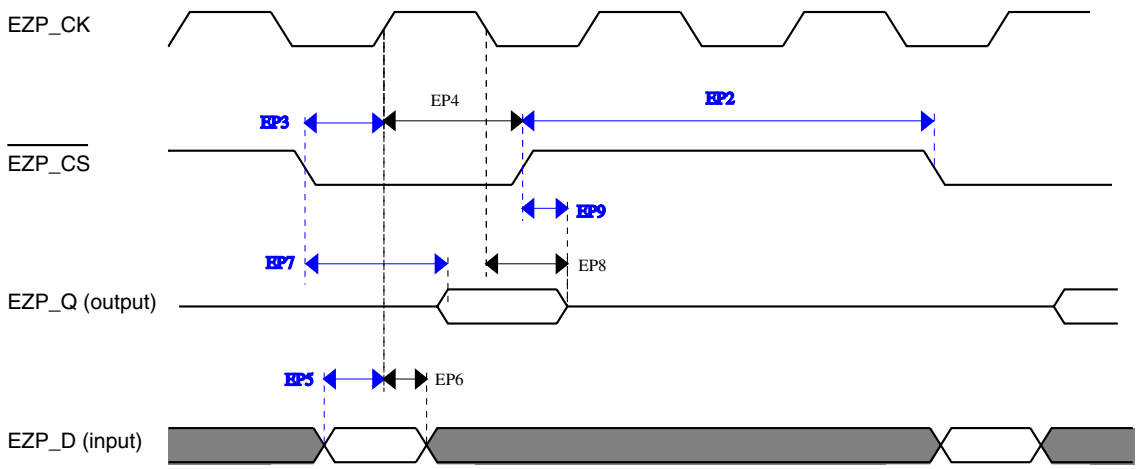

Figure 9. EzPort Timing Diagram

6.4.3 Flexbus switching specifications

All processor bus timings are synchronous; input setup/hold and output delay are given in respect to the rising edge of a reference clock, FB_CLK. The FB_CLK frequency may be the same as the internal system bus frequency or an integer divider of that frequency.

The following timing numbers indicate when data is latched or driven onto the external bus, relative to the Flexbus output clock (FB_CLK). All other timing relationships can be derived from these values.

Table 25. Flexbus limited voltage range switching specifications

Num	Description	Min.	Max.	Unit	Notes
	Operating voltage	2.7	3.6	V	
	Frequency of operation	—	FB_CLK	MHz	
FB1	Clock period	20	—	ns	
FB2	Address, data, and control output valid	—	11.5	ns	1
FB3	Address, data, and control output hold	0.5	—	ns	1
FB4	Data and $\overline{\text{FB_TA}}$ input setup	8.5	—	ns	2
FB5	Data and $\overline{\text{FB_TA}}$ input hold	0.5	—	ns	2

1. Specification is valid for all FB_AD[31:0], $\overline{\text{FB_BE/BWE}n}$, $\overline{\text{FB_CS}n}$, $\overline{\text{FB_OE}}$, FB_R/$\overline{\text{W}}$,$\overline{\text{FB_TBST}}$, FB_TSIZ[1:0], FB_ALE, and $\overline{\text{FB_TS}}$.
2. Specification is valid for all FB_AD[31:0] and $\overline{\text{FB_TA}}$.

Table 26. Flexbus full voltage range switching specifications

Num	Description	Min.	Max.	Unit	Notes
	Operating voltage	1.71	3.6	V	
	Frequency of operation	—	FB_CLK	MHz	
FB1	Clock period	1/FB_CLK	—	ns	
FB2	Address, data, and control output valid	—	13.5	ns	1
FB3	Address, data, and control output hold	0	—	ns	1
FB4	Data and $\overline{\text{FB_TA}}$ input setup	13.7	—	ns	2
FB5	Data and $\overline{\text{FB_TA}}$ input hold	0.5	—	ns	2

1. Specification is valid for all FB_AD[31:0], $\overline{\text{FB_BE/BWE}n}$, $\overline{\text{FB_CS}n}$, $\overline{\text{FB_OE}}$, FB_R/$\overline{\text{W}}$,$\overline{\text{FB_TBST}}$, FB_TSIZ[1:0], FB_ALE, and $\overline{\text{FB_TS}}$.
2. Specification is valid for all FB_AD[31:0] and $\overline{\text{FB_TA}}$.

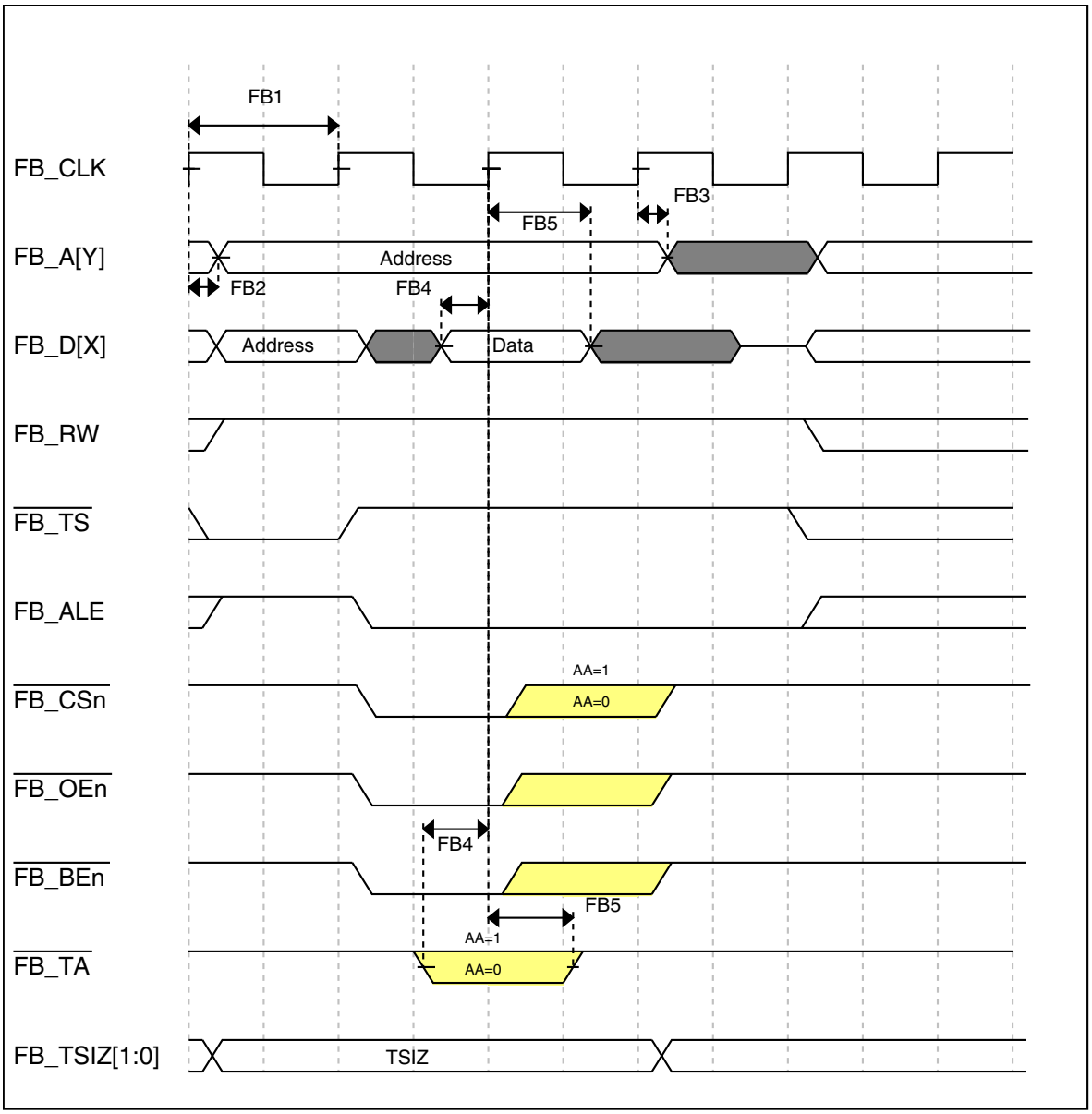

Figure 10. FlexBus read timing diagram

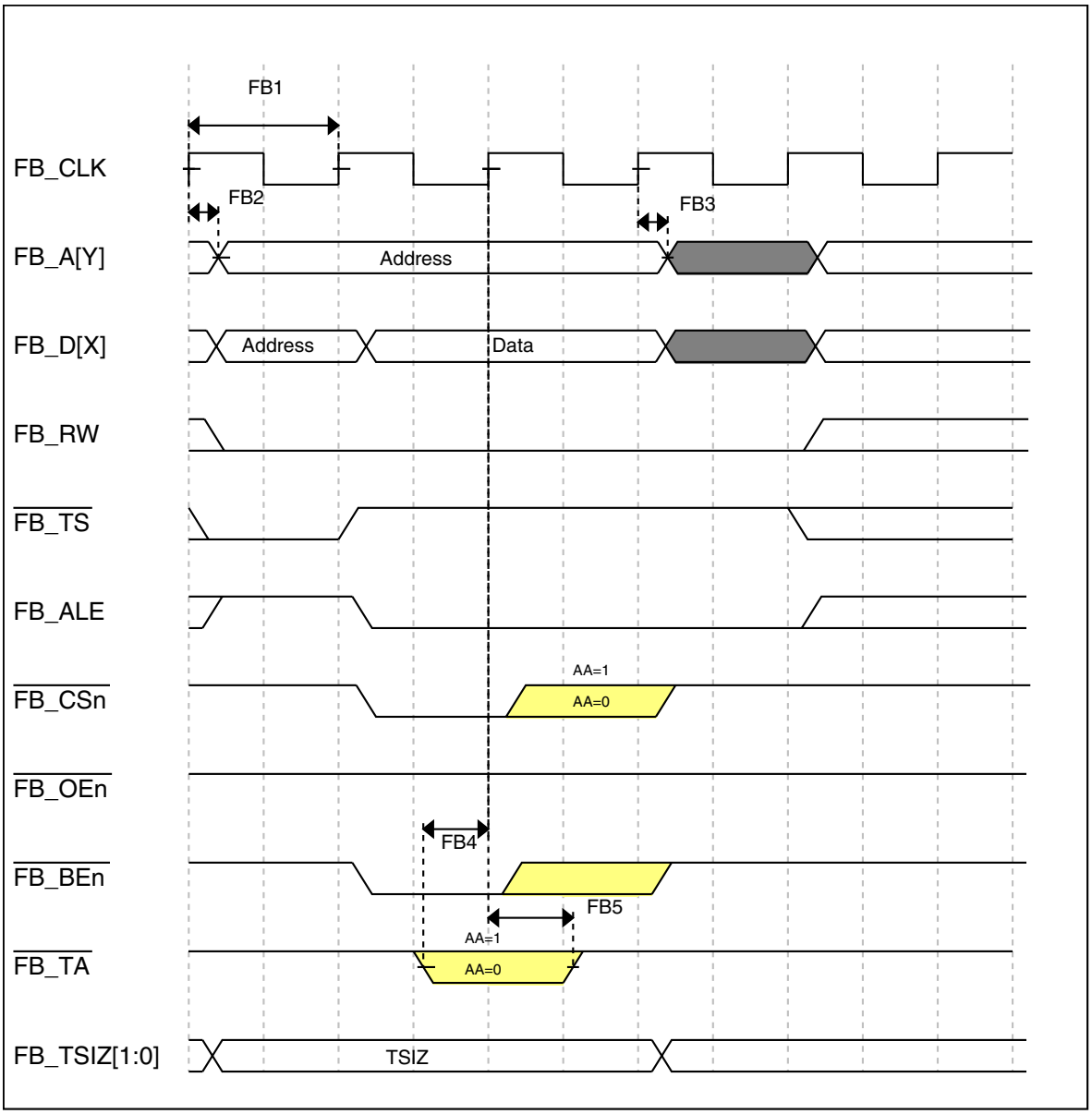

Figure 11. FlexBus write timing diagram

6.5 Security and integrity modules

There are no specifications necessary for the device's security and integrity modules.

6.6 Analog

6.6.1 ADC electrical specifications

The 16-bit accuracy specifications listed in Table 27 and Table 28 are achievable on the differential pins ADCx_DP0, ADCx_DM0, ADCx_DP1, ADCx_DM1, ADCx_DP3, and ADCx_DM3.

The ADCx_DP2 and ADCx_DM2 ADC inputs are connected to the PGA outputs and are not direct device pins. Accuracy specifications for these pins are defined in Table 29 and Table 30.

All other ADC channels meet the 13-bit differential/12-bit single-ended accuracy specifications.

6.6.1.1 16-bit ADC operating conditions

Table 27. 16-bit ADC operating conditions

Symbol	Description	Conditions	Min.	Typ.[1]	Max.	Unit	Notes
V_{DDA}	Supply voltage	Absolute	1.71	—	3.6	V	
ΔV_{DDA}	Supply voltage	Delta to V_{DD} ($V_{DD} – V_{DDA}$)	-100	0	+100	mV	2
ΔV_{SSA}	Ground voltage	Delta to V_{SS} ($V_{SS} – V_{SSA}$)	-100	0	+100	mV	2
V_{REFH}	ADC reference voltage high		1.13	V_{DDA}	V_{DDA}	V	
V_{REFL}	ADC reference voltage low		V_{SSA}	V_{SSA}	V_{SSA}	V	
V_{ADIN}	Input voltage	• 16-bit differential mode • All other modes	VREFL VREFL	— —	31/32 * VREFH VREFH	V	
C_{ADIN}	Input capacitance	• 16-bit mode • 8-bit / 10-bit / 12-bit modes	— —	8 4	10 5	pF	
R_{ADIN}	Input resistance		—	2	5	kΩ	
R_{AS}	Analog source resistance	13-bit / 12-bit modes f_{ADCK} < 4 MHz	—	—	5	kΩ	3
f_{ADCK}	ADC conversion clock frequency	≤ 13-bit mode	1.0	—	18.0	MHz	4
f_{ADCK}	ADC conversion clock frequency	16-bit mode	2.0	—	12.0	MHz	4
C_{rate}	ADC conversion rate	≤ 13-bit modes No ADC hardware averaging Continuous conversions enabled, subsequent conversion time	20.000	—	818.330	Ksps	5

Table continues on the next page...

Table 27. 16-bit ADC operating conditions (continued)

Symbol	Description	Conditions	Min.	Typ.[1]	Max.	Unit	Notes
C_{rate}	ADC conversion rate	16-bit mode No ADC hardware averaging Continuous conversions enabled, subsequent conversion time	37.037	—	461.467	Ksps	5

1. Typical values assume V_{DDA} = 3.0 V, Temp = 25 °C, f_{ADCK} = 1.0 MHz, unless otherwise stated. Typical values are for reference only, and are not tested in production.
2. DC potential difference.
3. This resistance is external to MCU. To achieve the best results, the analog source resistance must be kept as low as possible. The results in this data sheet were derived from a system that had < 8 Ω analog source resistance. The R_{AS}/C_{AS} time constant should be kept to < 1 ns.
4. To use the maximum ADC conversion clock frequency, CFG2[ADHSC] must be set and CFG1[ADLPC] must be clear.
5. For guidelines and examples of conversion rate calculation, download the ADC calculator tool.

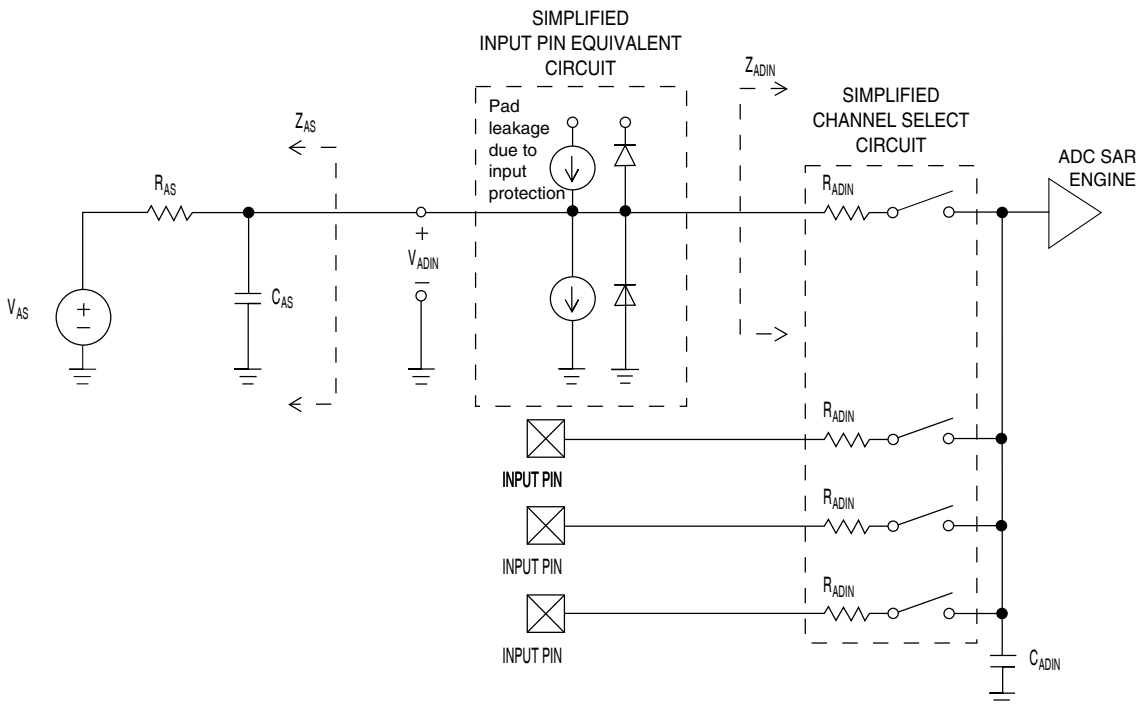

Figure 12. ADC input impedance equivalency diagram

6.6.1.2 16-bit ADC electrical characteristics

Table 28. 16-bit ADC characteristics ($V_{REFH} = V_{DDA}$, $V_{REFL} = V_{SSA}$)

Symbol	Description	Conditions[1].	Min.	Typ.[2]	Max.	Unit	Notes
I_{DDA_ADC}	Supply current		0.215	—	1.7	mA	3

Table continues on the next page...

Table 28. 16-bit ADC characteristics ($V_{REFH} = V_{DDA}$, $V_{REFL} = V_{SSA}$) (continued)

Symbol	Description	Conditions[1].	Min.	Typ.[2]	Max.	Unit	Notes
f_{ADACK}	ADC asynchronous clock source	• ADLPC = 1, ADHSC = 0 • ADLPC = 1, ADHSC = 1 • ADLPC = 0, ADHSC = 0 • ADLPC = 0, ADHSC = 1	1.2 2.4 3.0 4.4	2.4 4.0 5.2 6.2	3.9 6.1 7.3 9.5	MHz MHz MHz MHz	$t_{ADACK} = 1/f_{ADACK}$
	Sample Time	See Reference Manual chapter for sample times					
TUE	Total unadjusted error	• 12-bit modes • <12-bit modes	— —	±4 ±1.4	±6.8 ±2.1	LSB[4]	5
DNL	Differential non-linearity	• 12-bit modes • <12-bit modes	— —	±0.7 ±0.2	-1.1 to +1.9 -0.3 to 0.5	LSB[4]	5
INL	Integral non-linearity	• 12-bit modes • <12-bit modes	— —	±1.0 ±0.5	-2.7 to +1.9 -0.7 to +0.5	LSB[4]	5
E_{FS}	Full-scale error	• 12-bit modes • <12-bit modes	— —	-4 -1.4	-5.4 -1.8	LSB[4]	$V_{ADIN} = V_{DDA}$ 5
E_Q	Quantization error	• 16-bit modes • ≤13-bit modes	— —	-1 to 0 —	— ±0.5	LSB[4]	
ENOB	Effective number of bits	16-bit differential mode • Avg = 32 • Avg = 4 16-bit single-ended mode • Avg = 32 • Avg = 4	 12.8 11.9 12.2 11.4	 14.5 13.8 13.9 13.1	 — — — —	 bits bits bits bits	6
SINAD	Signal-to-noise plus distortion	See ENOB	6.02 × ENOB + 1.76			dB	
THD	Total harmonic distortion	16-bit differential mode • Avg = 32 16-bit single-ended mode • Avg = 32	 — —	 –94 -85	 — —	 dB dB	7
SFDR	Spurious free dynamic range	16-bit differential mode • Avg = 32 16-bit single-ended mode • Avg = 32	 82 78	 95 90	 — —	 dB dB	7

Table continues on the next page...

Table 28. 16-bit ADC characteristics ($V_{REFH} = V_{DDA}$, $V_{REFL} = V_{SSA}$) (continued)

Symbol	Description	Conditions[1].	Min.	Typ.[2]	Max.	Unit	Notes
E_{IL}	Input leakage error			$I_{In} \times R_{AS}$		mV	I_{In} = leakage current (refer to the MCU's voltage and current operating ratings)
	Temp sensor slope	Across the full temperature range of the device	1.55	1.62	1.69	mV/°C	
V_{TEMP25}	Temp sensor voltage	25 °C	706	716	726	mV	

1. All accuracy numbers assume the ADC is calibrated with $V_{REFH} = V_{DDA}$
2. Typical values assume V_{DDA} = 3.0 V, Temp = 25 °C, f_{ADCK} = 2.0 MHz unless otherwise stated. Typical values are for reference only and are not tested in production.
3. The ADC supply current depends on the ADC conversion clock speed, conversion rate and ADC_CFG1[ADLPC] (low power). For lowest power operation, ADC_CFG1[ADLPC] must be set, the ADC_CFG2[ADHSC] bit must be clear with 1 MHz ADC conversion clock speed.
4. 1 LSB = $(V_{REFH} - V_{REFL})/2^N$
5. ADC conversion clock < 16 MHz, Max hardware averaging (AVGE = %1, AVGS = %11)
6. Input data is 100 Hz sine wave. ADC conversion clock < 12 MHz.
7. Input data is 1 kHz sine wave. ADC conversion clock < 12 MHz.

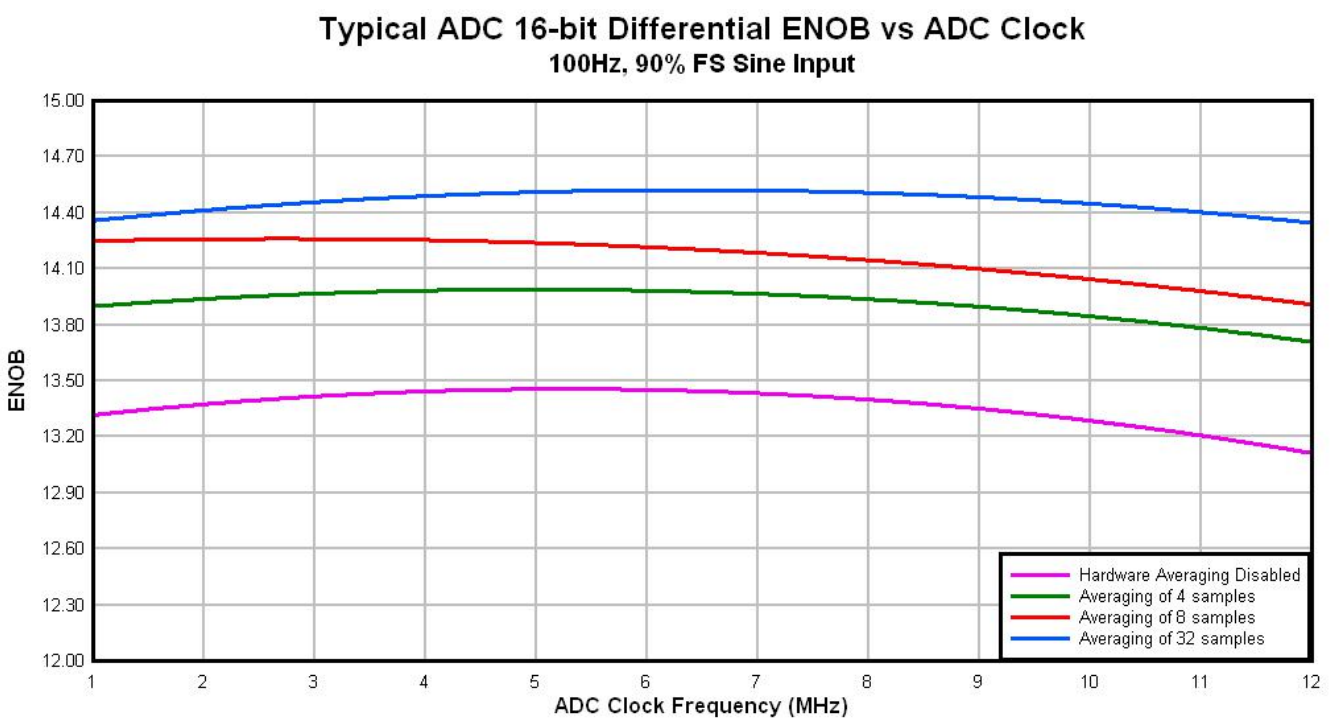

Figure 13. Typical ENOB vs. ADC_CLK for 16-bit differential mode

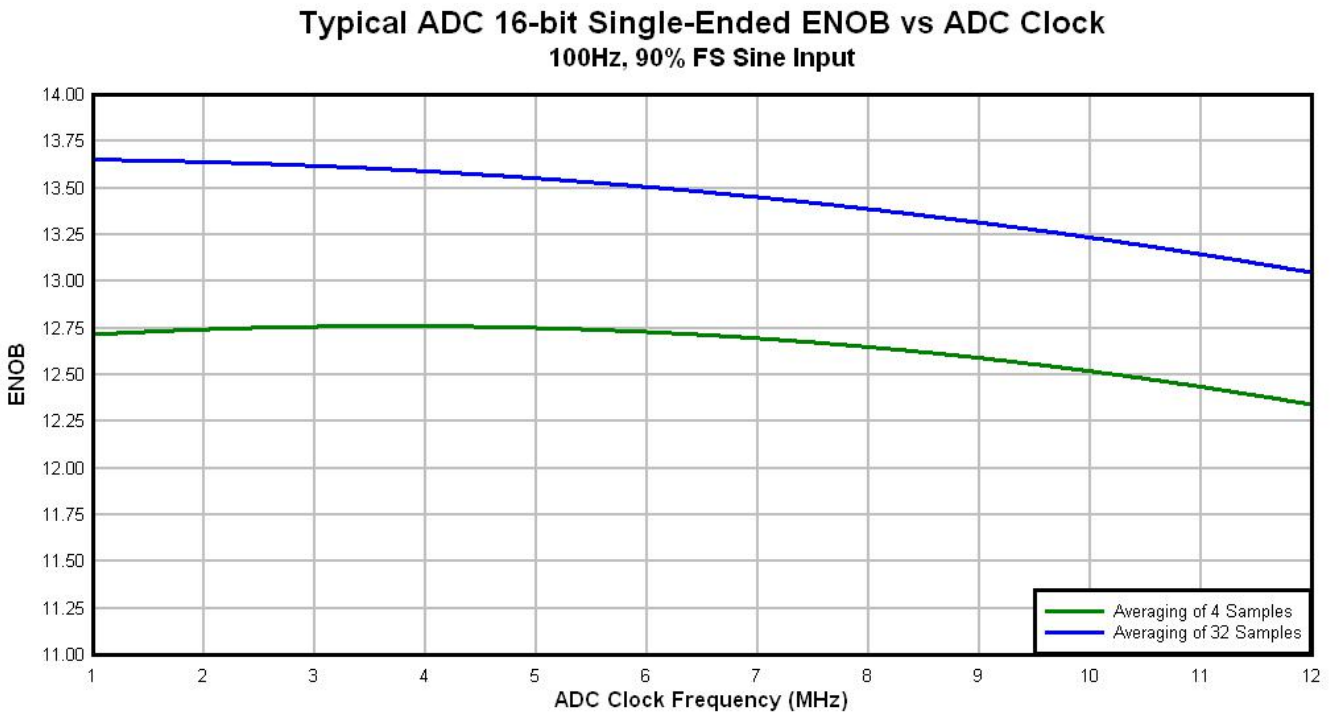

Figure 14. Typical ENOB vs. ADC_CLK for 16-bit single-ended mode

6.6.1.3 16-bit ADC with PGA operating conditions

Table 29. 16-bit ADC with PGA operating conditions

Symbol	Description	Conditions	Min.	Typ.[1]	Max.	Unit	Notes
V_{DDA}	Supply voltage	Absolute	1.71	—	3.6	V	
V_{REFPGA}	PGA ref voltage		VREF_OUT	VREF_OUT	VREF_OUT	V	2, 3
V_{ADIN}	Input voltage		V_{SSA}	—	V_{DDA}	V	
V_{CM}	Input Common Mode range		V_{SSA}	—	V_{DDA}	V	
R_{PGAD}	Differential input impedance	Gain = 1, 2, 4, 8 Gain = 16, 32 Gain = 64	— — —	128 64 32	— — —	kΩ	IN+ to IN-[4]
R_{AS}	Analog source resistance		—	100	—	Ω	5
T_S	ADC sampling time		1.25	—	—	μs	6

Table continues on the next page...

Table 29. 16-bit ADC with PGA operating conditions (continued)

Symbol	Description	Conditions	Min.	Typ.[1]	Max.	Unit	Notes
C_{rate}	ADC conversion rate	≤ 13 bit modes No ADC hardware averaging Continuous conversions enabled Peripheral clock = 50 MHz	18.484	—	450	Ksps	7
		16 bit modes No ADC hardware averaging Continuous conversions enabled Peripheral clock = 50 MHz	37.037	—	250	Ksps	8

1. Typical values assume V_{DDA} = 3.0 V, Temp = 25°C, f_{ADCK} = 6 MHz unless otherwise stated. Typical values are for reference only and are not tested in production.
2. ADC must be configured to use the internal voltage reference (VREF_OUT)
3. PGA reference is internally connected to the VREF_OUT pin. If the user wishes to drive VREF_OUT with a voltage other than the output of the VREF module, the VREF module must be disabled.
4. For single ended configurations the input impedance of the driven input is $R_{PGAD}/2$
5. The analog source resistance (R_{AS}), external to MCU, should be kept as minimum as possible. Increased R_{AS} causes drop in PGA gain without affecting other performances. This is not dependent on ADC clock frequency.
6. The minimum sampling time is dependent on input signal frequency and ADC mode of operation. A minimum of 1.25µs time should be allowed for F_{in}=4 kHz at 16-bit differential mode. Recommended ADC setting is: ADLSMP=1, ADLSTS=2 at 8 MHz ADC clock.
7. ADC clock = 18 MHz, ADLSMP = 1, ADLST = 00, ADHSC = 1
8. ADC clock = 12 MHz, ADLSMP = 1, ADLST = 01, ADHSC = 1

6.6.1.4 16-bit ADC with PGA characteristics with Chop enabled (ADC_PGA[PGACHPb] =0)

Table 30. 16-bit ADC with PGA characteristics

Symbol	Description	Conditions	Min.	Typ.[1]	Max.	Unit	Notes
I_{DDA_PGA}	Supply current	Low power (ADC_PGA[PGALPb]=0)	—	420	644	µA	2
I_{DC_PGA}	Input DC current		$\frac{2}{R_{PGAD}}\left(\frac{(V_{REFPGA}\times 0.583)-V_{CM}}{(Gain+1)}\right)$			A	3
		Gain =1, V_{REFPGA}=1.2V, V_{CM}=0.5V	—	1.54	—	µA	
		Gain =64, V_{REFPGA}=1.2V, V_{CM}=0.1V	—	0.57	—	µA	

Table continues on the next page...

Table 30. 16-bit ADC with PGA characteristics (continued)

Symbol	Description	Conditions	Min.	Typ.[1]	Max.	Unit	Notes
G	Gain[4]	• PGAG=0 • PGAG=1 • PGAG=2 • PGAG=3 • PGAG=4 • PGAG=5 • PGAG=6	0.95 1.9 3.8 7.6 15.2 30.0 58.8	1 2 4 8 16 31.6 63.3	1.05 2.1 4.2 8.4 16.6 33.2 67.8		$R_{AS} < 100\Omega$
BW	Input signal bandwidth	• 16-bit modes • < 16-bit modes	— —	— —	4 40	kHz kHz	
PSRR	Power supply rejection ratio	Gain=1	—	-84	—	dB	V_{DDA}= 3V ±100mV, f_{VDDA}= 50Hz, 60Hz
CMRR	Common mode rejection ratio	• Gain=1 • Gain=64	— —	-84 -85	— —	dB dB	V_{CM}= 500mVpp, f_{VCM}= 50Hz, 100Hz
V_{OFS}	Input offset voltage		—	0.2	—	mV	Output offset = V_{OFS}*(Gain+1)
T_{GSW}	Gain switching settling time		—	—	10	μs	5
dG/dT	Gain drift over full temperature range	• Gain=1 • Gain=64	— —	6 31	10 42	ppm/°C ppm/°C	
dG/dV_{DDA}	Gain drift over supply voltage	• Gain=1 • Gain=64	— —	0.07 0.14	0.21 0.31	%/V %/V	V_{DDA} from 1.71 to 3.6V
E_{IL}	Input leakage error	All modes	$I_{In} \times R_{AS}$			mV	I_{In} = leakage current (refer to the MCU's voltage and current operating ratings)
$V_{PP,DIFF}$	Maximum differential input signal swing		$\left(\frac{(\min(V_X, V_{DDA}-V_X)-0.2)\times 4}{\text{Gain}}\right)$ where $V_X = V_{REFPGA} \times 0.583$			V	6
SNR	Signal-to-noise ratio	• Gain=1 • Gain=64	80 52	90 66	— —	dB dB	16-bit differential mode, Average=32
THD	Total harmonic distortion	• Gain=1 • Gain=64	85 49	100 95	— —	dB dB	16-bit differential mode, Average=32, f_{in}=100Hz

Table continues on the next page...

Table 30. 16-bit ADC with PGA characteristics (continued)

Symbol	Description	Conditions	Min.	Typ.[1]	Max.	Unit	Notes
SFDR	Spurious free dynamic range	• Gain=1 • Gain=64	85 53	105 88	— —	dB dB	16-bit differential mode, Average=32, f_{in}=100Hz
ENOB	Effective number of bits	• Gain=1, Average=4 • Gain=1, Average=8 • Gain=64, Average=4 • Gain=64, Average=8 • Gain=1, Average=32 • Gain=2, Average=32 • Gain=4, Average=32 • Gain=8, Average=32 • Gain=16, Average=32 • Gain=32, Average=32 • Gain=64, Average=32	11.6 8.0 7.2 6.3 12.8 11.0 7.9 7.3 6.8 6.8 7.5	13.4 13.6 9.6 9.6 14.5 14.3 13.8 13.1 12.5 11.5 10.6	— — — — — — — — — — —	bits bits bits bits bits bits bits bits bits bits bits	16-bit differential mode,f_{in}=100Hz
SINAD	Signal-to-noise plus distortion ratio	See ENOB	6.02 × ENOB + 1.76			dB	

1. Typical values assume V_{DDA} =3.0V, Temp=25°C, f_{ADCK}=6MHz unless otherwise stated.
2. This current is a PGA module adder, in addition to ADC conversion currents.
3. Between IN+ and IN-. The PGA draws a DC current from the input terminals. The magnitude of the DC current is a strong function of input common mode voltage (V_{CM}) and the PGA gain.
4. Gain = 2^{PGAG}
5. After changing the PGA gain setting, a minimum of 2 ADC+PGA conversions should be ignored.
6. Limit the input signal swing so that the PGA does not saturate during operation. Input signal swing is dependent on the PGA reference voltage and gain setting.

6.6.2 CMP and 6-bit DAC electrical specifications

Table 31. Comparator and 6-bit DAC electrical specifications

Symbol	Description	Min.	Typ.	Max.	Unit
V_{DD}	Supply voltage	1.71	—	3.6	V
I_{DDHS}	Supply current, High-speed mode (EN=1, PMODE=1)	—	—	200	μA
I_{DDLS}	Supply current, low-speed mode (EN=1, PMODE=0)	—	—	20	μA
V_{AIN}	Analog input voltage	V_{SS} – 0.3	—	V_{DD}	V
V_{AIO}	Analog input offset voltage	—	—	20	mV

Table continues on the next page...

Table 31. Comparator and 6-bit DAC electrical specifications (continued)

Symbol	Description	Min.	Typ.	Max.	Unit
V_H	Analog comparator hysteresis[1]				
	• CR0[HYSTCTR] = 00	—	5	—	mV
	• CR0[HYSTCTR] = 01	—	10	—	mV
	• CR0[HYSTCTR] = 10	—	20	—	mV
	• CR0[HYSTCTR] = 11	—	30	—	mV
V_{CMPOh}	Output high	V_{DD} – 0.5	—	—	V
V_{CMPOl}	Output low	—	—	0.5	V
t_{DHS}	Propagation delay, high-speed mode (EN=1, PMODE=1)	20	50	200	ns
t_{DLS}	Propagation delay, low-speed mode (EN=1, PMODE=0)	80	250	600	ns
	Analog comparator initialization delay[2]	—	—	40	μs
I_{DAC6b}	6-bit DAC current adder (enabled)	—	7	—	μA
INL	6-bit DAC integral non-linearity	–0.5	—	0.5	LSB[3]
DNL	6-bit DAC differential non-linearity	–0.3	—	0.3	LSB

1. Typical hysteresis is measured with input voltage range limited to 0.6 to V_{DD}-0.6 V.
2. Comparator initialization delay is defined as the time between software writes to change control inputs (Writes to DACEN, VRSEL, PSEL, MSEL, VOSEL) and the comparator output settling to a stable level.
3. 1 LSB = $V_{reference}$/64

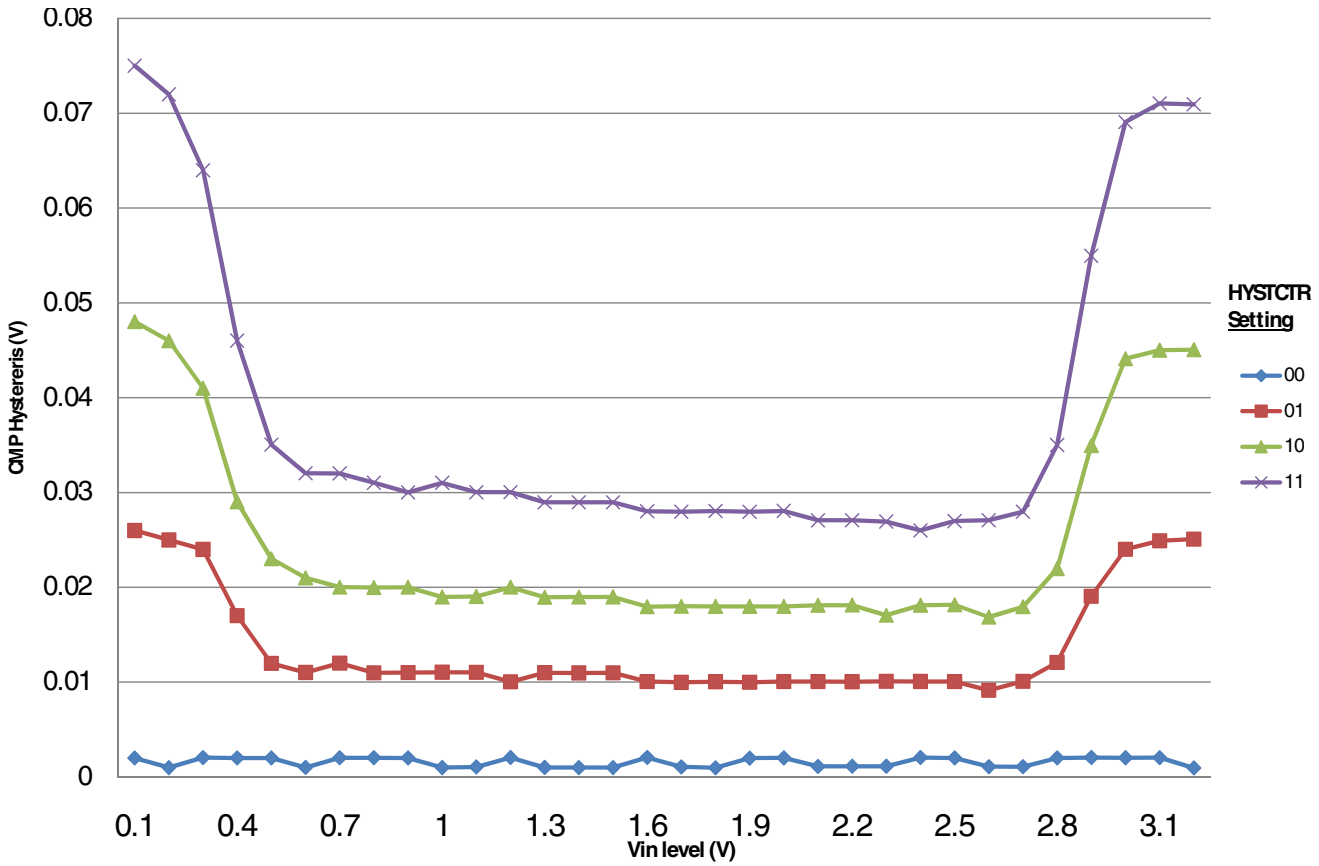

Figure 15. Typical hysteresis vs. Vin level (VDD=3.3V, PMODE=0)

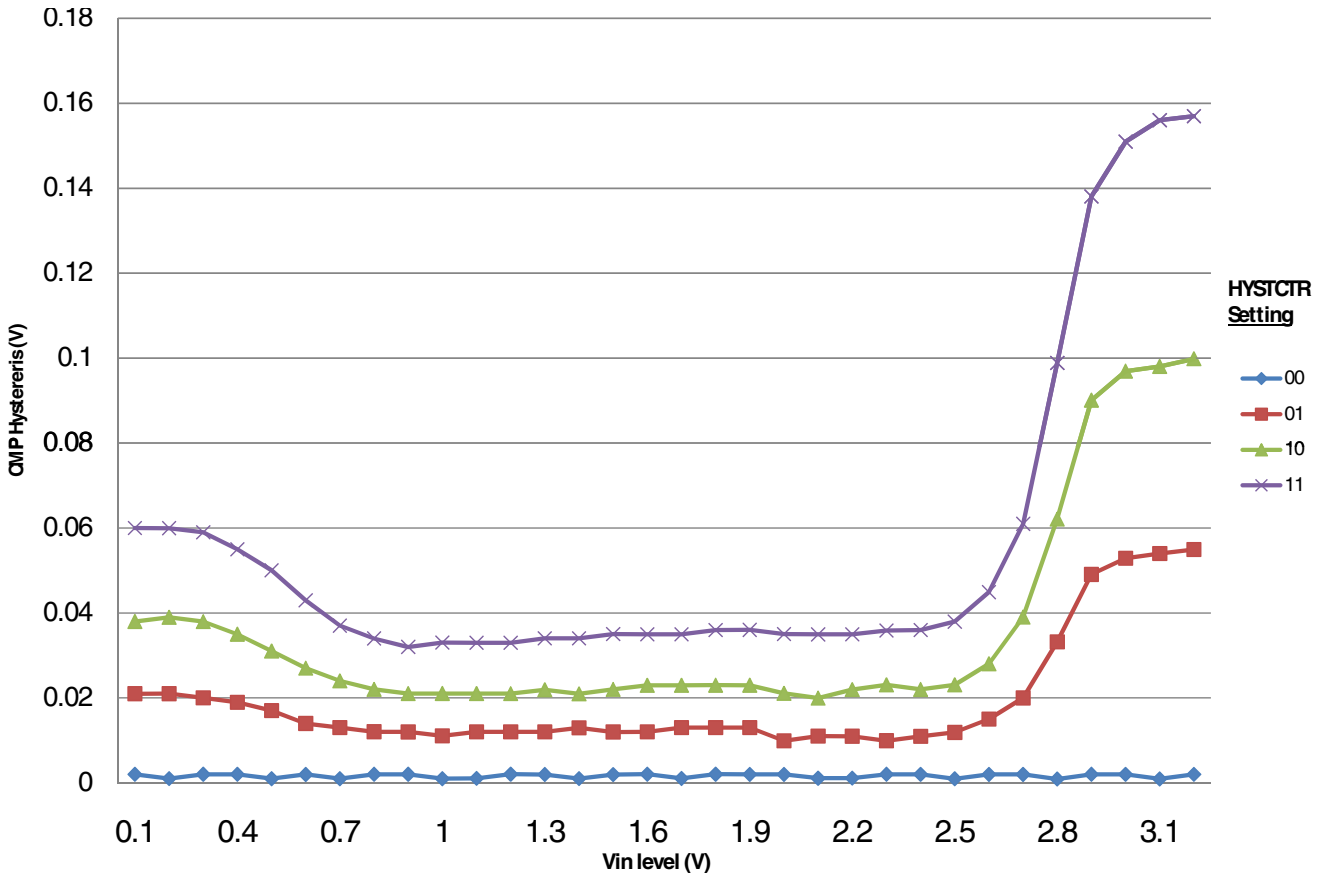

Figure 16. Typical hysteresis vs. Vin level (VDD=3.3V, PMODE=1)

6.6.3 12-bit DAC electrical characteristics

6.6.3.1 12-bit DAC operating requirements

Table 32. 12-bit DAC operating requirements

Symbol	Desciption	Min.	Max.	Unit	Notes
V_{DDA}	Supply voltage	1.71	3.6	V	
V_{DACR}	Reference voltage	1.13	3.6	V	1
T_A	Temperature	Operating temperature range of the device		°C	
C_L	Output load capacitance	—	100	pF	2
I_L	Output load current	—	1	mA	

1. The DAC reference can be selected to be V_{DDA} or the voltage output of the VREF module (VREF_OUT)
2. A small load capacitance (47 pF) can improve the bandwidth performance of the DAC

6.6.3.2 12-bit DAC operating behaviors

Table 33. 12-bit DAC operating behaviors

Symbol	Description	Min.	Typ.	Max.	Unit	Notes
I_{DDA_DACLP}	Supply current — low-power mode	—	—	330	μA	
I_{DDA_DACHP}	Supply current — high-speed mode	—	—	1200	μA	
t_{DACLP}	Full-scale settling time (0x080 to 0xF7F) — low-power mode	—	100	200	μs	1
t_{DACHP}	Full-scale settling time (0x080 to 0xF7F) — high-power mode	—	15	30	μs	1
$t_{CCDACLP}$	Code-to-code settling time (0xBF8 to 0xC08) — low-power mode and high-speed mode	—	0.7	1	μs	1
$V_{dacoutl}$	DAC output voltage range low — high-speed mode, no load, DAC set to 0x000	—	—	100	mV	
$V_{dacouth}$	DAC output voltage range high — high-speed mode, no load, DAC set to 0xFFF	V_{DACR} –100	—	V_{DACR}	mV	
INL	Integral non-linearity error — high speed mode	—	—	±8	LSB	2
DNL	Differential non-linearity error — V_{DACR} > 2 V	—	—	±1	LSB	3
DNL	Differential non-linearity error — V_{DACR} = VREF_OUT	—	—	±1	LSB	4
V_{OFFSET}	Offset error	—	±0.4	±0.8	%FSR	5
E_G	Gain error	—	±0.1	±0.6	%FSR	5
PSRR	Power supply rejection ratio, V_{DDA} > = 2.4 V	60	—	90	dB	
T_{CO}	Temperature coefficient offset voltage	—	3.7	—	μV/C	6
T_{GE}	Temperature coefficient gain error	—	0.000421	—	%FSR/C	
Rop	Output resistance load = 3 kΩ	—	—	250	Ω	
SR	Slew rate -80h→ F7Fh→ 80h • High power (SP_{HP}) • Low power (SP_{LP})	 1.2 0.05	 1.7 0.12	 — —	V/μs	
CT	Channel to channel cross talk	—	—	-80	dB	
BW	3dB bandwidth • High power (SP_{HP}) • Low power (SP_{LP})	 550 40	 — —	 — —	kHz	

1. Settling within ±1 LSB
2. The INL is measured for 0+100mV to V_{DACR}–100 mV
3. The DNL is measured for 0+100 mV to V_{DACR}–100 mV
4. The DNL is measured for 0+100mV to V_{DACR}–100 mV with V_{DDA} > 2.4V
5. Calculated by a best fit curve from V_{SS}+100 mV to V_{DACR}–100 mV
6. VDDA = 3.0V, reference select set for VDDA (DACx_CO:DACRFS = 1), high power mode(DACx_C0:LPEN = 0), DAC set to 0x800, Temp range from -40C to 105C

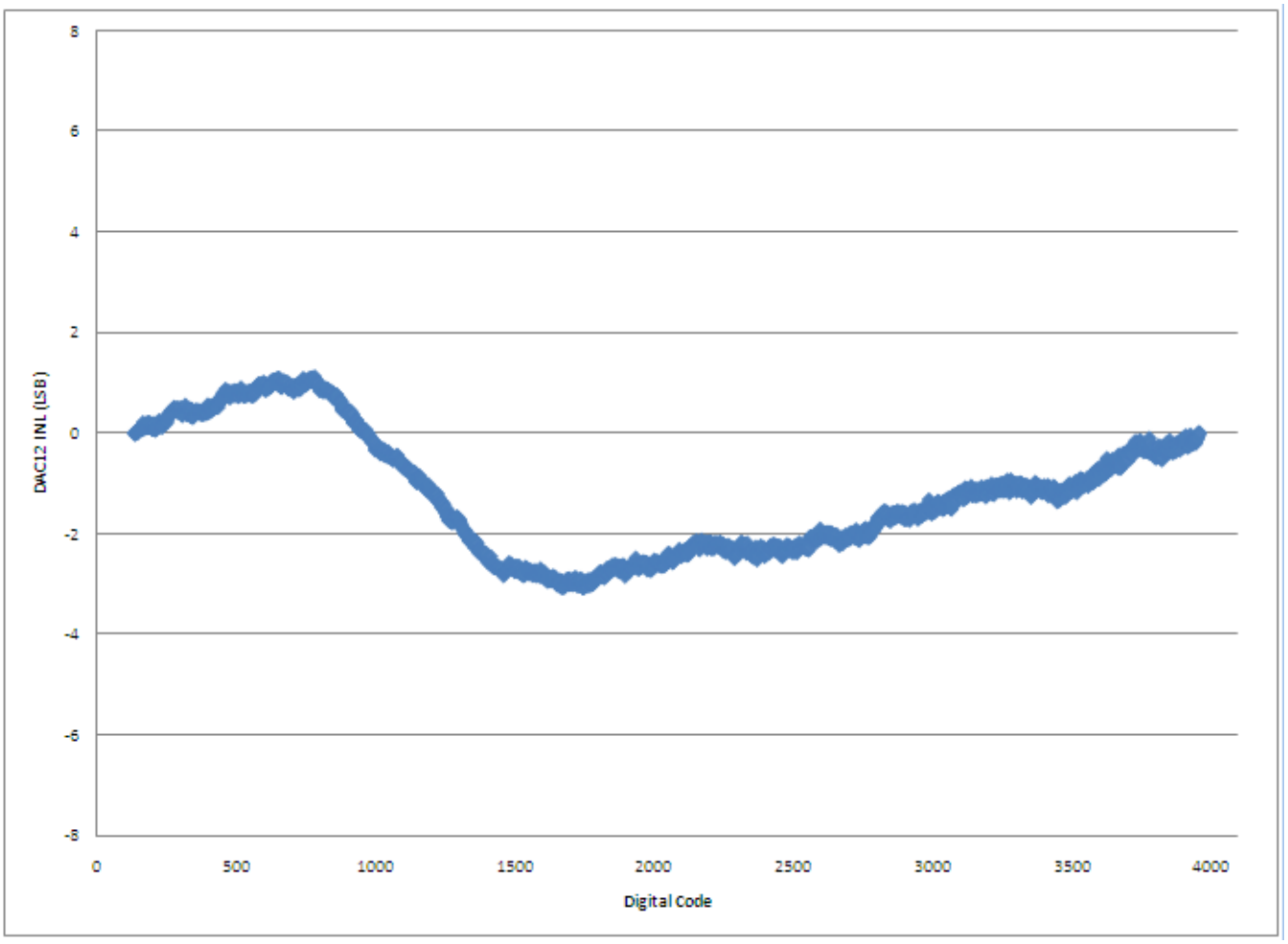

Figure 17. Typical INL error vs. digital code

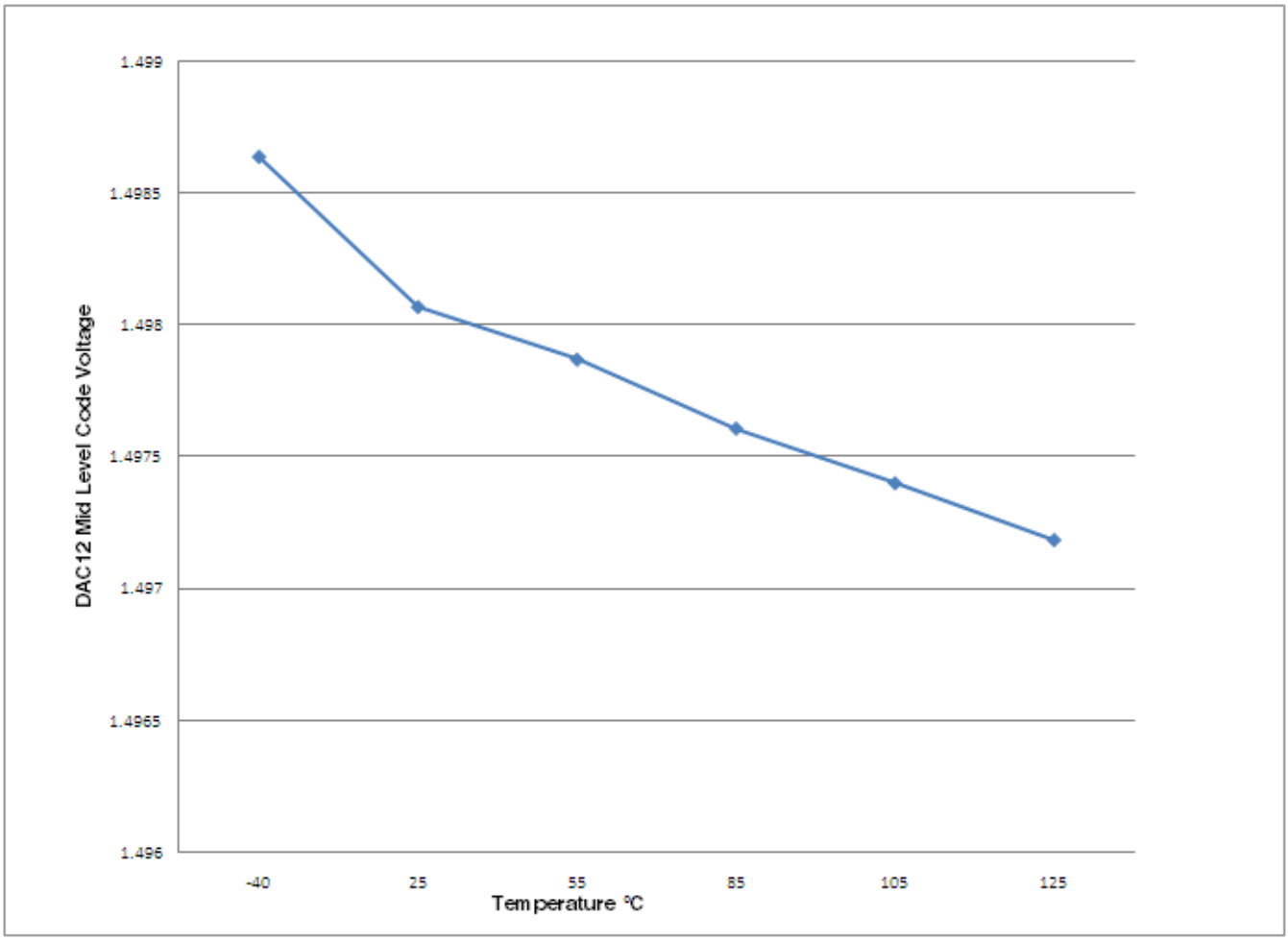

Figure 18. Offset at half scale vs. temperature

6.6.4 Voltage reference electrical specifications

Table 34. VREF full-range operating requirements

Symbol	Description	Min.	Max.	Unit	Notes
V_{DDA}	Supply voltage	1.71	3.6	V	
T_A	Temperature	Operating temperature range of the device		°C	
C_L	Output load capacitance	100		nF	1, 2

1. C_L must be connected to VREF_OUT if the VREF_OUT functionality is being used for either an internal or external reference.
2. The load capacitance should not exceed +/-25% of the nominal specified C_L value over the operating temperature range of the device.

Table 35. VREF full-range operating behaviors

Symbol	Description	Min.	Typ.	Max.	Unit	Notes
V_{out}	Voltage reference output with factory trim at nominal V_{DDA} and temperature=25C	1.1915	1.195	1.1977	V	
V_{out}	Voltage reference output — factory trim	1.1584	—	1.2376	V	
V_{out}	Voltage reference output — user trim	1.193	—	1.197	V	
V_{step}	Voltage reference trim step	—	0.5	—	mV	
V_{tdrift}	Temperature drift (Vmax -Vmin across the full temperature range)	—	—	80	mV	
I_{bg}	Bandgap only current	—	—	80	μA	1
I_{lp}	Low-power buffer current	—	—	360	uA	1
I_{hp}	High-power buffer current	—	—	1	mA	1
ΔV_{LOAD}	Load regulation • current = ± 1.0 mA	— —	 200	 —	μV	1, 2
T_{stup}	Buffer startup time	—	—	100	μs	
V_{vdrift}	Voltage drift (Vmax -Vmin across the full voltage range)	—	2	—	mV	1

1. See the chip's Reference Manual for the appropriate settings of the VREF Status and Control register.
2. Load regulation voltage is the difference between the VREF_OUT voltage with no load vs. voltage with defined load

Table 36. VREF limited-range operating requirements

Symbol	Description	Min.	Max.	Unit	Notes
T_A	Temperature	0	50	°C	

Table 37. VREF limited-range operating behaviors

Symbol	Description	Min.	Max.	Unit	Notes
V_{out}	Voltage reference output with factory trim	1.173	1.225	V	

6.7 Timers

See General switching specifications.

6.8 Communication interfaces

6.8.1 USB electrical specifications

The USB electricals for the USB On-the-Go module conform to the standards documented by the Universal Serial Bus Implementers Forum. For the most up-to-date standards, visit **usb.org**.

6.8.2 USB DCD electrical specifications

Table 38. USB DCD electrical specifications

Symbol	Description	Min.	Typ.	Max.	Unit
V_{DP_SRC}	USB_DP source voltage (up to 250 μA)	0.5	—	0.7	V
V_{LGC}	Threshold voltage for logic high	0.8	—	2.0	V
I_{DP_SRC}	USB_DP source current	7	10	13	μA
I_{DM_SINK}	USB_DM sink current	50	100	150	μA
R_{DM_DWN}	D- pulldown resistance for data pin contact detect	14.25	—	24.8	kΩ
V_{DAT_REF}	Data detect voltage	0.25	0.33	0.4	V

6.8.3 USB VREG electrical specifications

Table 39. USB VREG electrical specifications

Symbol	Description	Min.	Typ.[1]	Max.	Unit	Notes
VREGIN	Input supply voltage	2.7	—	5.5	V	
I_{DDon}	Quiescent current — Run mode, load current equal zero, input supply (VREGIN) > 3.6 V	—	120	186	μA	
I_{DDstby}	Quiescent current — Standby mode, load current equal zero	—	1.1	10	μA	
I_{DDoff}	Quiescent current — Shutdown mode • VREGIN = 5.0 V and temperature=25 °C • Across operating voltage and temperature	 — —	 650 —	 — 4	 nA μA	
$I_{LOADrun}$	Maximum load current — Run mode	—	—	120	mA	
$I_{LOADstby}$	Maximum load current — Standby mode	—	—	1	mA	
$V_{Reg33out}$	Regulator output voltage — Input supply (VREGIN) > 3.6 V • Run mode • Standby mode	 3 2.1	 3.3 2.8	 3.6 3.6	 V V	
$V_{Reg33out}$	Regulator output voltage — Input supply (VREGIN) < 3.6 V, pass-through mode	2.1	—	3.6	V	2
C_{OUT}	External output capacitor	1.76	2.2	8.16	μF	
ESR	External output capacitor equivalent series resistance	1	—	100	mΩ	

Table continues on the next page...

Table 39. USB VREG electrical specifications (continued)

Symbol	Description	Min.	Typ.[1]	Max.	Unit	Notes
I_{LIM}	Short circuit current	—	290	—	mA	

1. Typical values assume VREGIN = 5.0 V, Temp = 25 °C unless otherwise stated.
2. Operating in pass-through mode: regulator output voltage equal to the input voltage minus a drop proportional to I_{Load}.

6.8.4 CAN switching specifications

See General switching specifications.

6.8.5 DSPI switching specifications (limited voltage range)

The DMA Serial Peripheral Interface (DSPI) provides a synchronous serial bus with master and slave operations. Many of the transfer attributes are programmable. The tables below provide DSPI timing characteristics for classic SPI timing modes. Refer to the DSPI chapter of the Reference Manual for information on the modified transfer formats used for communicating with slower peripheral devices.

Table 40. Master mode DSPI timing (limited voltage range)

Num	Description	Min.	Max.	Unit	Notes
	Operating voltage	2.7	3.6	V	
	Frequency of operation	—	25	MHz	
DS1	DSPI_SCK output cycle time	2 x t_{BUS}	—	ns	
DS2	DSPI_SCK output high/low time	(t_{SCK}/2) – 2	(t_{SCK}/2) + 2	ns	
DS3	DSPI_PCS*n* valid to DSPI_SCK delay	(t_{BUS} x 2) – 2	—	ns	1
DS4	DSPI_SCK to DSPI_PCS*n* invalid delay	(t_{BUS} x 2) – 2	—	ns	2
DS5	DSPI_SCK to DSPI_SOUT valid	—	8	ns	
DS6	DSPI_SCK to DSPI_SOUT invalid	0	—	ns	
DS7	DSPI_SIN to DSPI_SCK input setup	14	—	ns	
DS8	DSPI_SCK to DSPI_SIN input hold	0	—	ns	

1. The delay is programmable in SPIx_CTARn[PSSCK] and SPIx_CTARn[CSSCK].
2. The delay is programmable in SPIx_CTARn[PASC] and SPIx_CTARn[ASC].

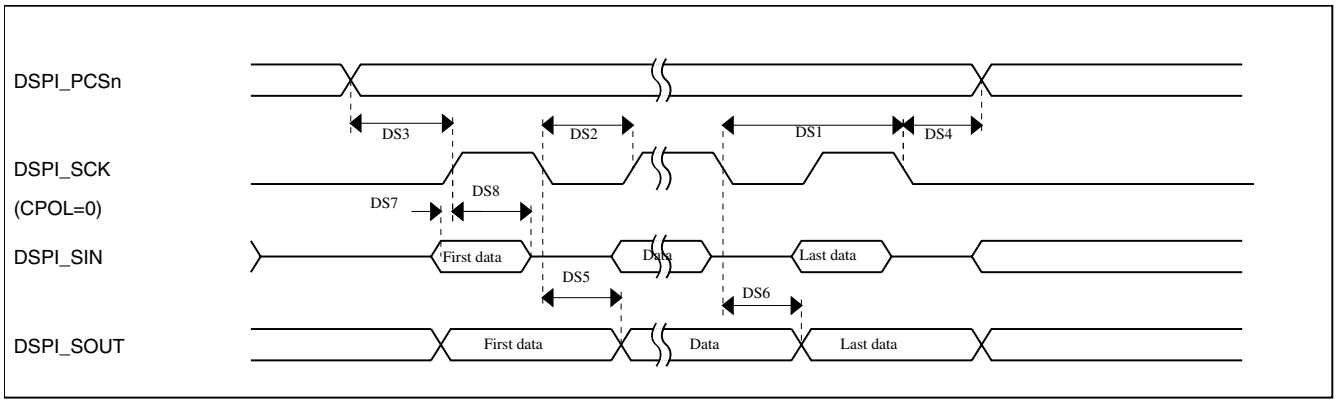

Figure 19. DSPI classic SPI timing — master mode

Table 41. Slave mode DSPI timing (limited voltage range)

Num	Description	Min.	Max.	Unit
	Operating voltage	2.7	3.6	V
	Frequency of operation		12.5	MHz
DS9	DSPI_SCK input cycle time	4 x t_{BUS}	—	ns
DS10	DSPI_SCK input high/low time	$(t_{SCK}/2) - 2$	$(t_{SCK}/2) + 2$	ns
DS11	DSPI_SCK to DSPI_SOUT valid	—	20	ns
DS12	DSPI_SCK to DSPI_SOUT invalid	0	—	ns
DS13	DSPI_SIN to DSPI_SCK input setup	2	—	ns
DS14	DSPI_SCK to DSPI_SIN input hold	7	—	ns
DS15	$\overline{\text{DSPI_SS}}$ active to DSPI_SOUT driven	—	14	ns
DS16	$\overline{\text{DSPI_SS}}$ inactive to DSPI_SOUT not driven	—	14	ns

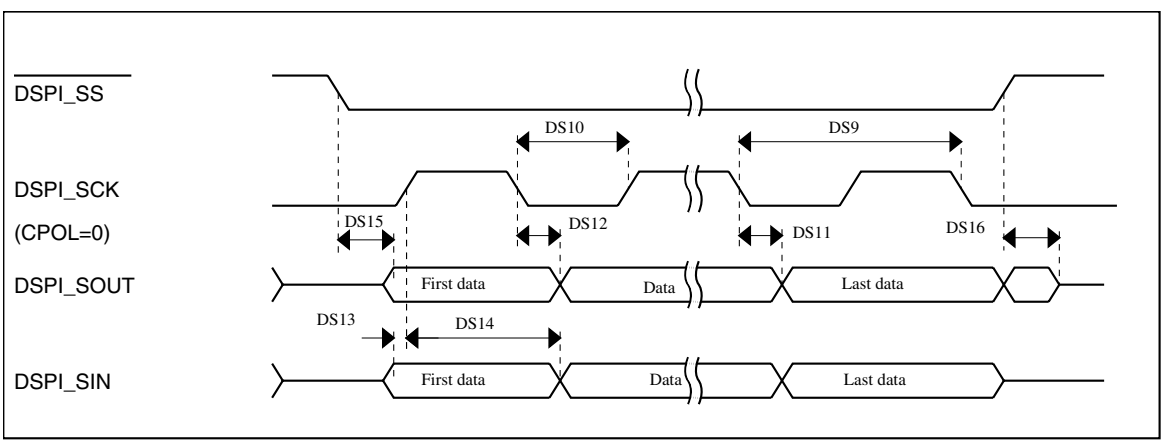

Figure 20. DSPI classic SPI timing — slave mode

6.8.6 DSPI switching specifications (full voltage range)

The DMA Serial Peripheral Interface (DSPI) provides a synchronous serial bus with master and slave operations. Many of the transfer attributes are programmable. The tables below provides DSPI timing characteristics for classic SPI timing modes. Refer to the DSPI chapter of the Reference Manual for information on the modified transfer formats used for communicating with slower peripheral devices.

Table 42. Master mode DSPI timing (full voltage range)

Num	Description	Min.	Max.	Unit	Notes
	Operating voltage	1.71	3.6	V	1
	Frequency of operation	—	12.5	MHz	
DS1	DSPI_SCK output cycle time	4 x t_{BUS}	—	ns	
DS2	DSPI_SCK output high/low time	(t_{SCK}/2) - 4	($t_{SCK/2)}$ + 4	ns	
DS3	DSPI_PCS*n* valid to DSPI_SCK delay	(t_{BUS} x 2) – 4	—	ns	2
DS4	DSPI_SCK to DSPI_PCS*n* invalid delay	(t_{BUS} x 2) – 4	—	ns	3
DS5	DSPI_SCK to DSPI_SOUT valid	—	8.5	ns	
DS6	DSPI_SCK to DSPI_SOUT invalid	-1.2	—	ns	
DS7	DSPI_SIN to DSPI_SCK input setup	19.1	—	ns	
DS8	DSPI_SCK to DSPI_SIN input hold	0	—	ns	

1. The DSPI module can operate across the entire operating voltage for the processor, but to run across the full voltage range the maximum frequency of operation is reduced.
2. The delay is programmable in SPIx_CTARn[PSSCK] and SPIx_CTARn[CSSCK].
3. The delay is programmable in SPIx_CTARn[PASC] and SPIx_CTARn[ASC].

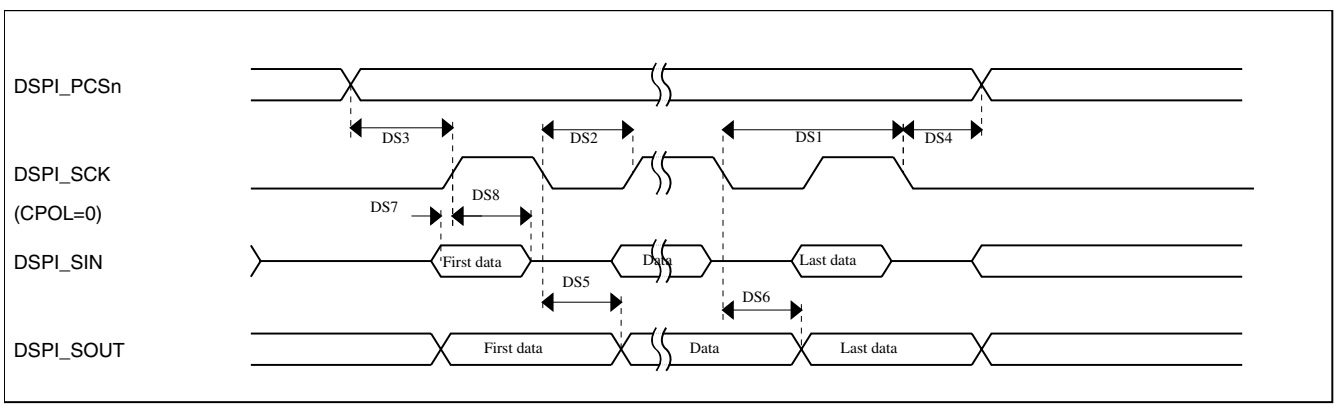

Figure 21. DSPI classic SPI timing — master mode

Table 43. Slave mode DSPI timing (full voltage range)

Num	Description	Min.	Max.	Unit
	Operating voltage	1.71	3.6	V
	Frequency of operation	—	6.25	MHz

Table continues on the next page...

Table 43. Slave mode DSPI timing (full voltage range) (continued)

Num	Description	Min.	Max.	Unit
DS9	DSPI_SCK input cycle time	8 x t_{BUS}	—	ns
DS10	DSPI_SCK input high/low time	(t_{SCK}/2) - 4	($t_{SCK/2)}$ + 4	ns
DS11	DSPI_SCK to DSPI_SOUT valid	—	24	ns
DS12	DSPI_SCK to DSPI_SOUT invalid	0	—	ns
DS13	DSPI_SIN to DSPI_SCK input setup	3.2	—	ns
DS14	DSPI_SCK to DSPI_SIN input hold	7	—	ns
DS15	$\overline{\text{DSPI_SS}}$ active to DSPI_SOUT driven	—	19	ns
DS16	$\overline{\text{DSPI_SS}}$ inactive to DSPI_SOUT not driven	—	19	ns

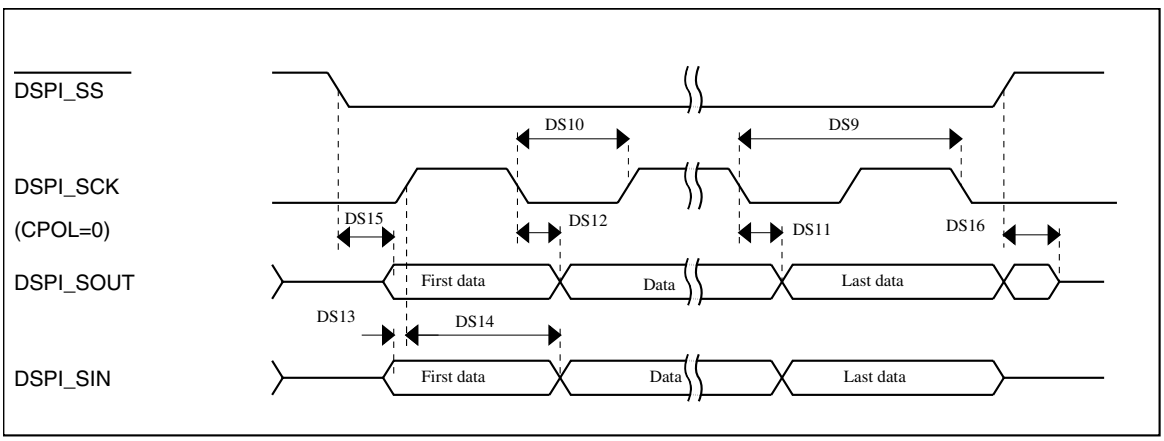

Figure 22. DSPI classic SPI timing — slave mode

6.8.7 Inter-Integrated Circuit Interface (I^2C) timing

Table 44. I^2C timing

Characteristic	Symbol	Standard Mode		Fast Mode		Unit
		Minimum	Maximum	Minimum	Maximum	
SCL Clock Frequency	f_{SCL}	0	100	0	400	kHz
Hold time (repeated) START condition. After this period, the first clock pulse is generated.	t_{HD}; STA	4	—	0.6	—	μs
LOW period of the SCL clock	t_{LOW}	4.7	—	1.3	—	μs
HIGH period of the SCL clock	t_{HIGH}	4	—	0.6	—	μs
Set-up time for a repeated START condition	t_{SU}; STA	4.7	—	0.6	—	μs
Data hold time for I_2C bus devices	t_{HD}; DAT	0[1]	3.45[2]	0[3]	0.9[1]	μs
Data set-up time	t_{SU}; DAT	250[4]	—	100[2, 5]	—	ns
Rise time of SDA and SCL signals	t_r	—	1000	20 +0.1C_b[6]	300	ns

Table continues on the next page...

Table 44. I ^{2}C timing (continued)

Characteristic	Symbol	Standard Mode		Fast Mode		Unit
		Minimum	Maximum	Minimum	Maximum	
Fall time of SDA and SCL signals	t_f	—	300	20 +0.1C_b[5]	300	ns
Set-up time for STOP condition	t_{SU}; STO	4	—	0.6	—	μs
Bus free time between STOP and START condition	t_{BUF}	4.7	—	1.3	—	μs
Pulse width of spikes that must be suppressed by the input filter	t_{SP}	N/A	N/A	0	50	ns

1. The master mode I^{2}C deasserts ACK of an address byte simultaneously with the falling edge of SCL. If no slaves acknowledge this address byte, then a negative hold time can result, depending on the edge rates of the SDA and SCL lines.
2. The maximum tHD; DAT must be met only if the device does not stretch the LOW period (tLOW) of the SCL signal.
3. Input signal Slew = 10 ns and Output Load = 50 pF
4. Set-up time in slave-transmitter mode is 1 IPBus clock period, if the TX FIFO is empty.
5. A Fast mode I^{2}C bus device can be used in a Standard mode I2C bus system, but the requirement $t_{SU;\ DAT} \geq 250$ ns must then be met. This is automatically the case if the device does not stretch the LOW period of the SCL signal. If such a device does stretch the LOW period of the SCL signal, then it must output the next data bit to the SDA line $t_{rmax} + t_{SU;\ DAT}$ = 1000 + 250 = 1250 ns (according to the Standard mode I^{2}C bus specification) before the SCL line is released.
6. C_b = total capacitance of the one bus line in pF.

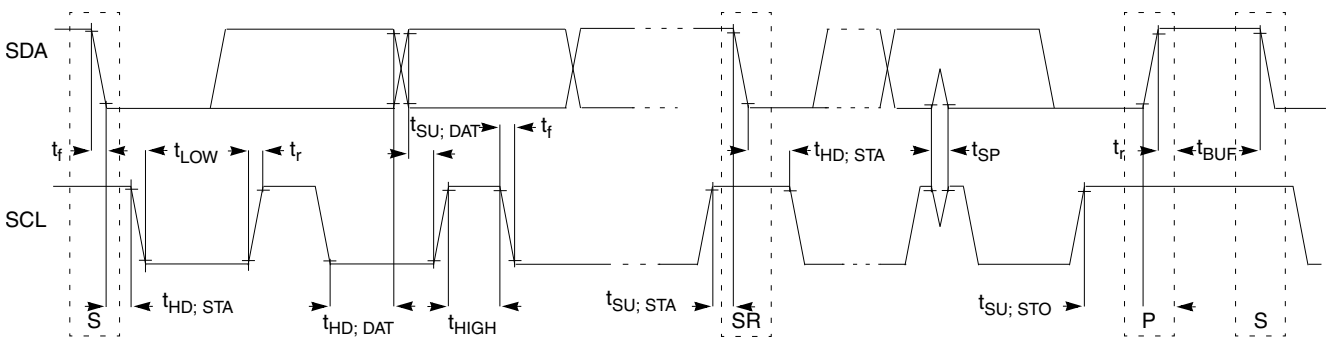

Figure 23. Timing definition for fast and standard mode devices on the I^{2}C bus

6.8.8 UART switching specifications

See General switching specifications.

6.8.9 SDHC specifications

The following timing specs are defined at the chip I/O pin and must be translated appropriately to arrive at timing specs/constraints for the physical interface.

Table 45. SDHC switching specifications

Num	Symbol	Description	Min.	Max.	Unit
		Operating voltage	1.71	3.6	V
		Card input clock			
SD1	fpp	Clock frequency (low speed)	0	400	kHz
	fpp	Clock frequency (SD\SDIO full speed\high speed)	0	25\50	MHz
	fpp	Clock frequency (MMC full speed\high speed)	0	20\50	MHz
	f_{OD}	Clock frequency (identification mode)	0	400	kHz
SD2	t_{WL}	Clock low time	7	—	ns
SD3	t_{WH}	Clock high time	7	—	ns
SD4	t_{TLH}	Clock rise time	—	3	ns
SD5	t_{THL}	Clock fall time	—	3	ns
		SDHC output / card inputs SDHC_CMD, SDHC_DAT (reference to SDHC_CLK)			
SD6	t_{OD}	SDHC output delay (output valid)	-5	8.3	ns
		SDHC input / card inputs SDHC_CMD, SDHC_DAT (reference to SDHC_CLK)			
SD7	t_{ISU}	SDHC input setup time	5	—	ns
SD8	t_{IH}	SDHC input hold time	0	—	ns

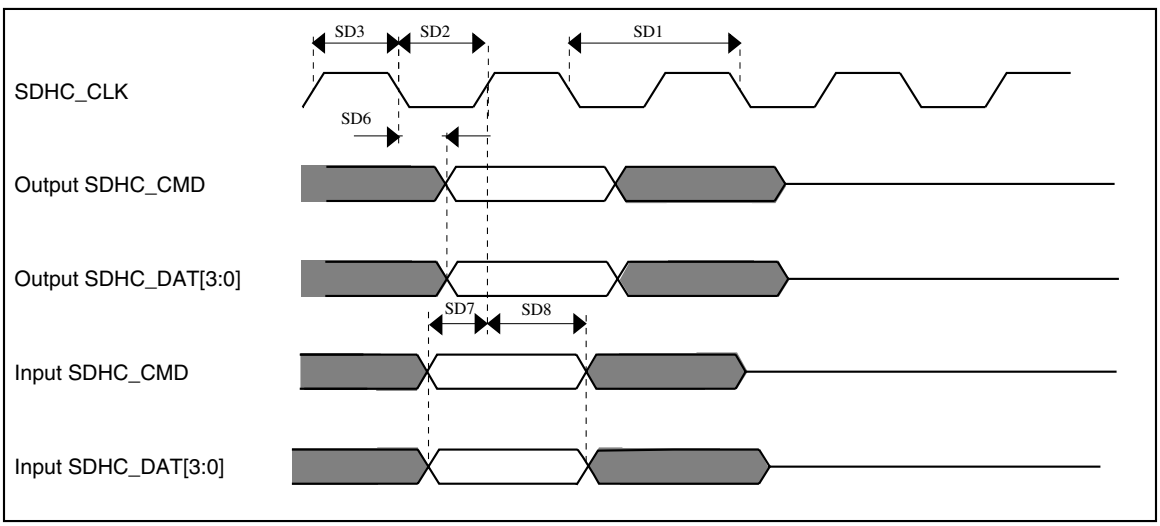

Figure 24. SDHC timing

6.8.10 I2S/SAI switching specifications

This section provides the AC timing for the I2S/SAI module in master mode (clocks are driven) and slave mode (clocks are input). All timing is given for noninverted serial clock polarity (TCR2[BCP] is 0, RCR2[BCP] is 0) and a noninverted frame sync (TCR4[FSP] is 0, RCR4[FSP] is 0). If the polarity of the clock and/or the frame sync have been inverted, all the timing remains valid by inverting the bit clock signal (BCLK) and/or the frame sync (FS) signal shown in the following figures.

6.8.10.1 Normal Run, Wait and Stop mode performance over a limited operating voltage range

This section provides the operating performance over a limited operating voltage for the device in Normal Run, Wait and Stop modes.

Table 46. I2S/SAI master mode timing in Normal Run, Wait and Stop modes (limited voltage range)

Num.	Characteristic	Min.	Max.	Unit
	Operating voltage	2.7	3.6	V
S1	I2S_MCLK cycle time	40	—	ns
S2	I2S_MCLK pulse width high/low	45%	55%	MCLK period
S3	I2S_TX_BCLK/I2S_RX_BCLK cycle time (output)	80	—	ns
S4	I2S_TX_BCLK/I2S_RX_BCLK pulse width high/low	45%	55%	BCLK period
S5	I2S_TX_BCLK/I2S_RX_BCLK to I2S_TX_FS/ I2S_RX_FS output valid	—	15	ns
S6	I2S_TX_BCLK/I2S_RX_BCLK to I2S_TX_FS/ I2S_RX_FS output invalid	0	—	ns
S7	I2S_TX_BCLK to I2S_TXD valid	—	15	ns
S8	I2S_TX_BCLK to I2S_TXD invalid	0	—	ns
S9	I2S_RXD/I2S_RX_FS input setup before I2S_RX_BCLK	15	—	ns
S10	I2S_RXD/I2S_RX_FS input hold after I2S_RX_BCLK	0	—	ns

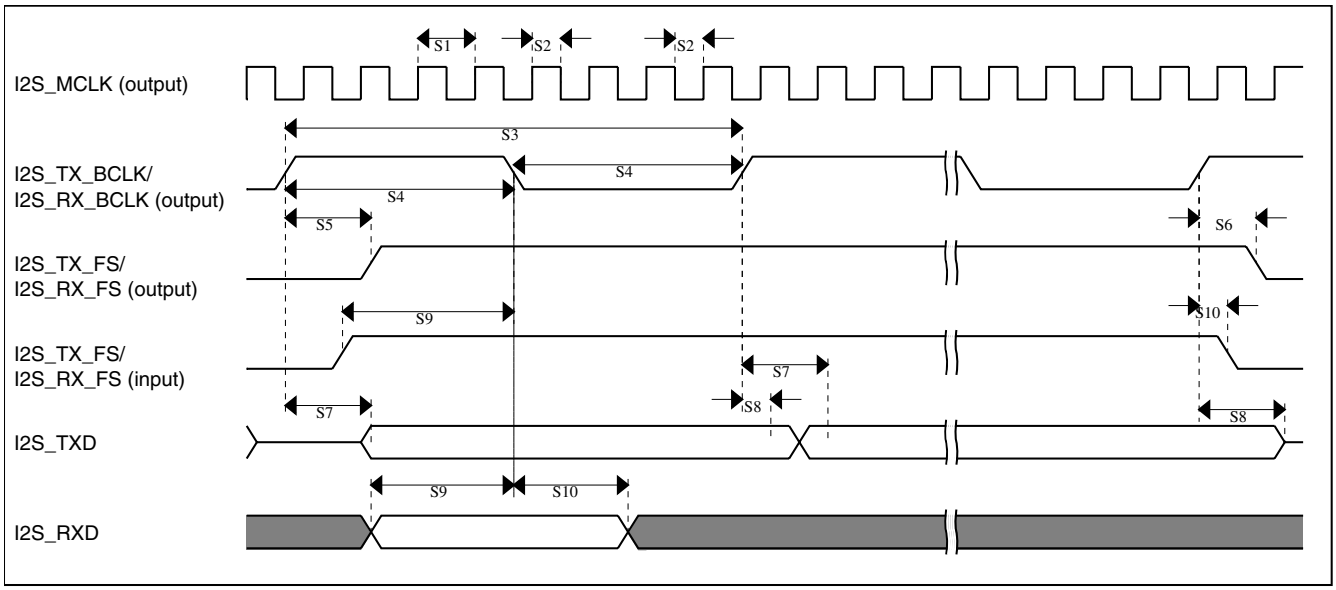

Figure 25. I2S/SAI timing — master modes

Table 47. I2S/SAI slave mode timing in Normal Run, Wait and Stop modes (limited voltage range)

Num.	Characteristic	Min.	Max.	Unit
	Operating voltage	2.7	3.6	V
S11	I2S_TX_BCLK/I2S_RX_BCLK cycle time (input)	80	—	ns
S12	I2S_TX_BCLK/I2S_RX_BCLK pulse width high/low (input)	45%	55%	MCLK period
S13	I2S_TX_FS/I2S_RX_FS input setup before I2S_TX_BCLK/I2S_RX_BCLK	4.5	—	ns
S14	I2S_TX_FS/I2S_RX_FS input hold after I2S_TX_BCLK/I2S_RX_BCLK	2	—	ns
S15	I2S_TX_BCLK to I2S_TXD/I2S_TX_FS output valid • Multiple SAI Synchronous mode • All other modes	 — —	 21 15	ns
S16	I2S_TX_BCLK to I2S_TXD/I2S_TX_FS output invalid	0	—	ns
S17	I2S_RXD setup before I2S_RX_BCLK	4.5	—	ns
S18	I2S_RXD hold after I2S_RX_BCLK	2	—	ns
S19	I2S_TX_FS input assertion to I2S_TXD output valid[1]	—	25	ns

1. Applies to first bit in each frame and only if the TCR4[FSE] bit is clear

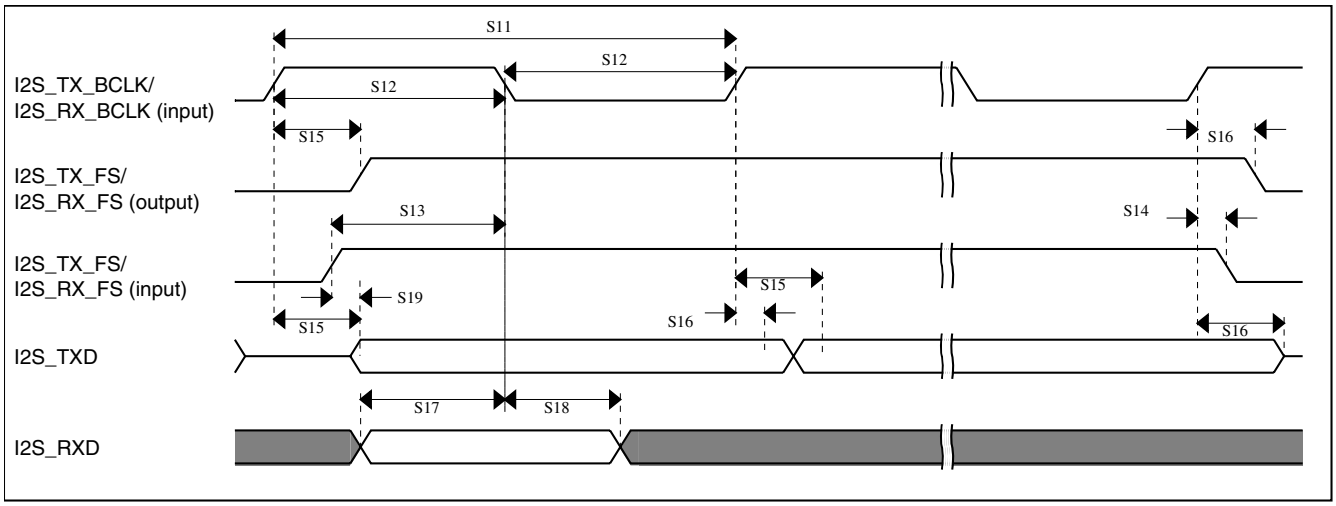

Figure 26. I2S/SAI timing — slave modes

6.8.10.2 Normal Run, Wait and Stop mode performance over the full operating voltage range

This section provides the operating performance over the full operating voltage for the device in Normal Run, Wait and Stop modes.

Table 48. I2S/SAI master mode timing in Normal Run, Wait and Stop modes (full voltage range)

Num.	Characteristic	Min.	Max.	Unit
	Operating voltage	1.71	3.6	V
S1	I2S_MCLK cycle time	40	—	ns
S2	I2S_MCLK pulse width high/low	45%	55%	MCLK period
S3	I2S_TX_BCLK/I2S_RX_BCLK cycle time (output)	80	—	ns
S4	I2S_TX_BCLK/I2S_RX_BCLK pulse width high/low	45%	55%	BCLK period
S5	I2S_TX_BCLK/I2S_RX_BCLK to I2S_TX_FS/ I2S_RX_FS output valid	—	15	ns
S6	I2S_TX_BCLK/I2S_RX_BCLK to I2S_TX_FS/ I2S_RX_FS output invalid	-1.0	—	ns
S7	I2S_TX_BCLK to I2S_TXD valid	—	15	ns
S8	I2S_TX_BCLK to I2S_TXD invalid	0	—	ns
S9	I2S_RXD/I2S_RX_FS input setup before I2S_RX_BCLK	20.5	—	ns
S10	I2S_RXD/I2S_RX_FS input hold after I2S_RX_BCLK	0	—	ns

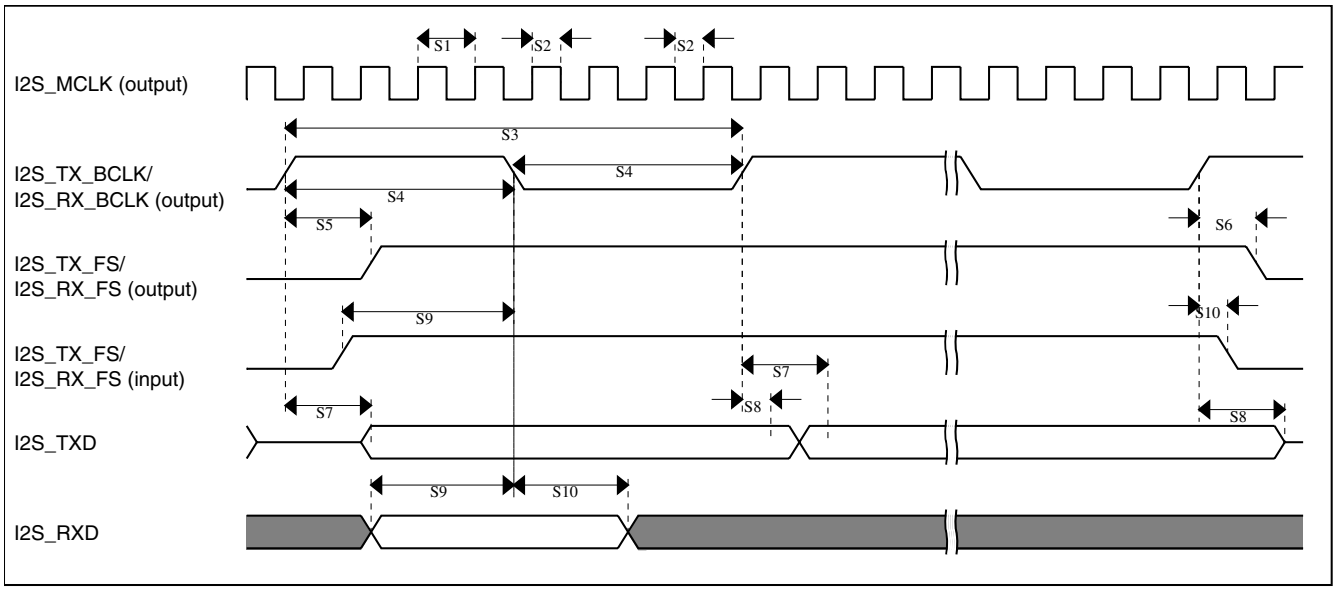

Figure 27. I2S/SAI timing — master modes

Table 49. I2S/SAI slave mode timing in Normal Run, Wait and Stop modes (full voltage range)

Num.	Characteristic	Min.	Max.	Unit
	Operating voltage	1.71	3.6	V
S11	I2S_TX_BCLK/I2S_RX_BCLK cycle time (input)	80	—	ns
S12	I2S_TX_BCLK/I2S_RX_BCLK pulse width high/low (input)	45%	55%	MCLK period
S13	I2S_TX_FS/I2S_RX_FS input setup before I2S_TX_BCLK/I2S_RX_BCLK	5.8	—	ns
S14	I2S_TX_FS/I2S_RX_FS input hold after I2S_TX_BCLK/I2S_RX_BCLK	2	—	ns
S15	I2S_TX_BCLK to I2S_TXD/I2S_TX_FS output valid • Multiple SAI Synchronous mode • All other modes	 — —	 24 20.6	ns
S16	I2S_TX_BCLK to I2S_TXD/I2S_TX_FS output invalid	0	—	ns
S17	I2S_RXD setup before I2S_RX_BCLK	5.8	—	ns
S18	I2S_RXD hold after I2S_RX_BCLK	2	—	ns
S19	I2S_TX_FS input assertion to I2S_TXD output valid[1]	—	25	ns

1. Applies to first bit in each frame and only if the TCR4[FSE] bit is clear

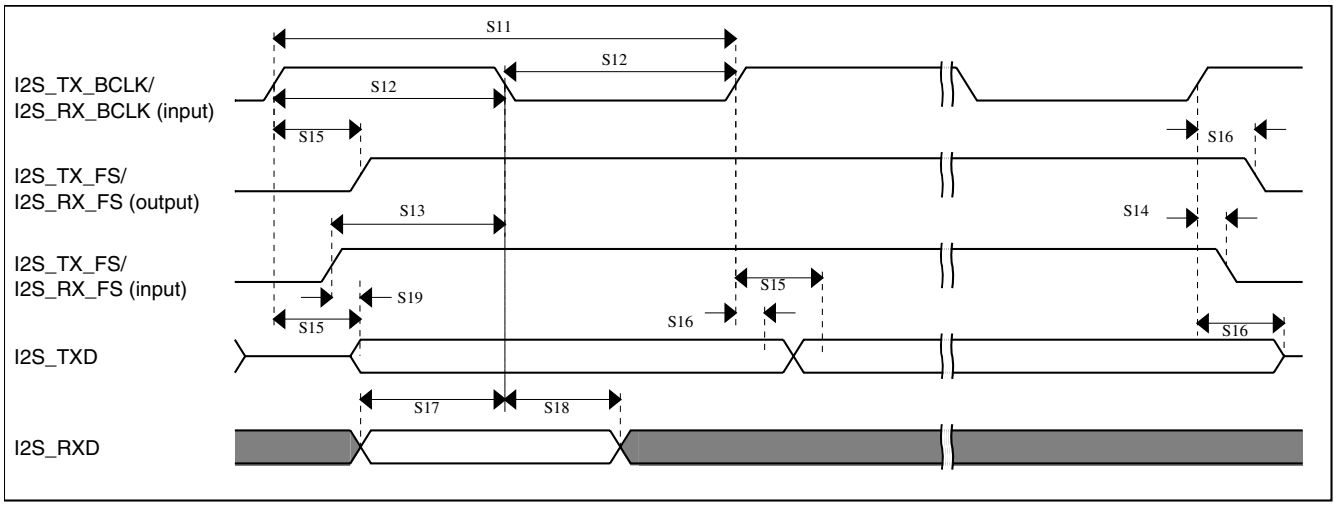

Figure 28. I2S/SAI timing — slave modes

6.8.10.3 VLPR, VLPW, and VLPS mode performance over the full operating voltage range

This section provides the operating performance over the full operating voltage for the device in VLPR, VLPW, and VLPS modes.

Table 50. I2S/SAI master mode timing in VLPR, VLPW, and VLPS modes (full voltage range)

Num.	Characteristic	Min.	Max.	Unit
	Operating voltage	1.71	3.6	V
S1	I2S_MCLK cycle time	62.5	—	ns
S2	I2S_MCLK pulse width high/low	45%	55%	MCLK period
S3	I2S_TX_BCLK/I2S_RX_BCLK cycle time (output)	250	—	ns
S4	I2S_TX_BCLK/I2S_RX_BCLK pulse width high/low	45%	55%	BCLK period
S5	I2S_TX_BCLK/I2S_RX_BCLK to I2S_TX_FS/ I2S_RX_FS output valid	—	45	ns
S6	I2S_TX_BCLK/I2S_RX_BCLK to I2S_TX_FS/ I2S_RX_FS output invalid	0	—	ns
S7	I2S_TX_BCLK to I2S_TXD valid	—	45	ns
S8	I2S_TX_BCLK to I2S_TXD invalid	0	—	ns
S9	I2S_RXD/I2S_RX_FS input setup before I2S_RX_BCLK	45	—	ns
S10	I2S_RXD/I2S_RX_FS input hold after I2S_RX_BCLK	0	—	ns

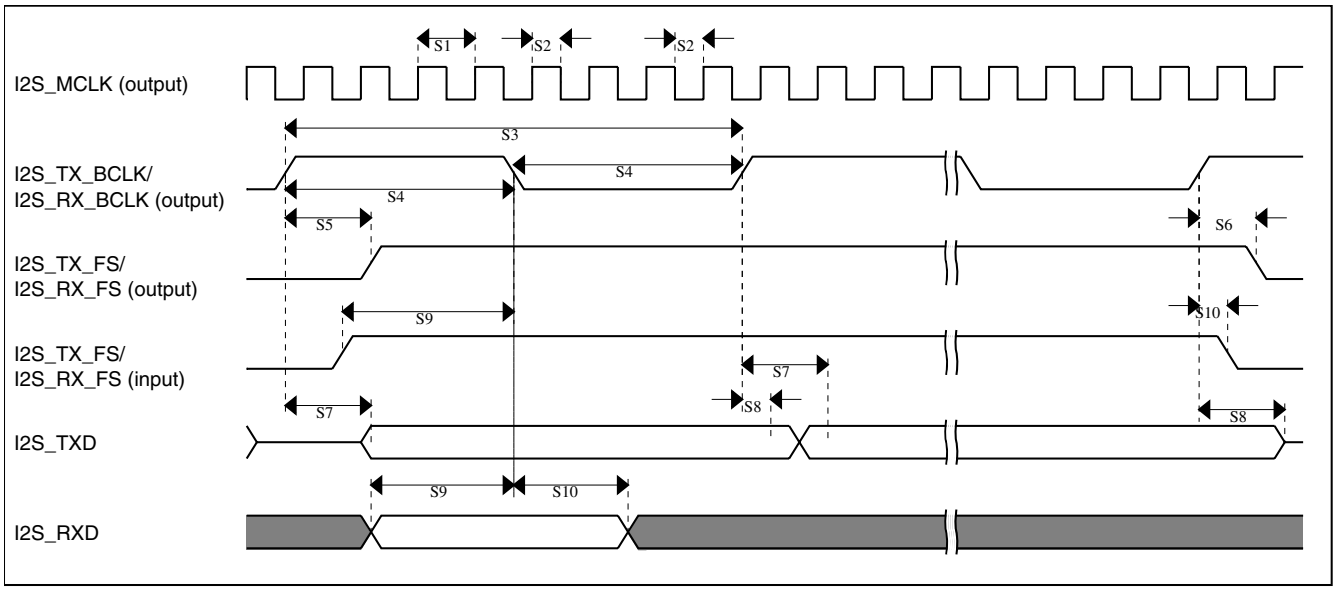

Figure 29. I2S/SAI timing — master modes

Table 51. I2S/SAI slave mode timing in VLPR, VLPW, and VLPS modes (full voltage range)

Num.	Characteristic	Min.	Max.	Unit
	Operating voltage	1.71	3.6	V
S11	I2S_TX_BCLK/I2S_RX_BCLK cycle time (input)	250	—	ns
S12	I2S_TX_BCLK/I2S_RX_BCLK pulse width high/low (input)	45%	55%	MCLK period
S13	I2S_TX_FS/I2S_RX_FS input setup before I2S_TX_BCLK/I2S_RX_BCLK	30	—	ns
S14	I2S_TX_FS/I2S_RX_FS input hold after I2S_TX_BCLK/I2S_RX_BCLK	3	—	ns
S15	I2S_TX_BCLK to I2S_TXD/I2S_TX_FS output valid	—	63	ns
S16	I2S_TX_BCLK to I2S_TXD/I2S_TX_FS output invalid	0	—	ns
S17	I2S_RXD setup before I2S_RX_BCLK	30	—	ns
S18	I2S_RXD hold after I2S_RX_BCLK	2	—	ns
S19	I2S_TX_FS input assertion to I2S_TXD output valid[1]	—	72	ns

1. Applies to first bit in each frame and only if the TCR4[FSE] bit is clear

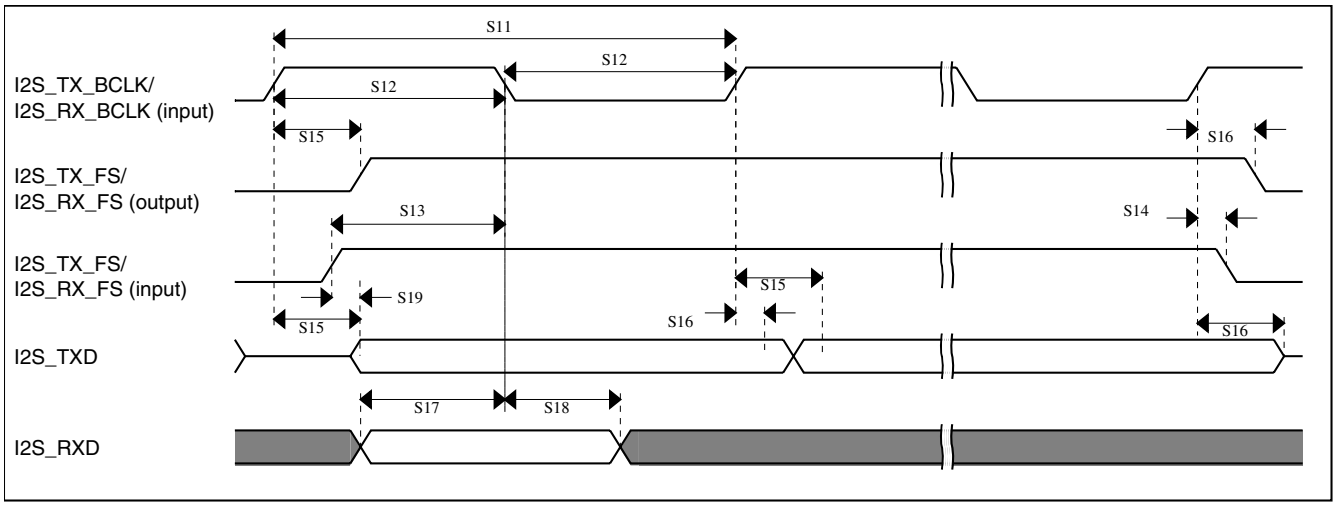

Figure 30. I2S/SAI timing — slave modes

6.9 Human-machine interfaces (HMI)

6.9.1 TSI electrical specifications

Table 52. TSI electrical specifications

Symbol	Description	Min.	Typ.	Max.	Unit	Notes
V_{DDTSI}	Operating voltage	1.71	—	3.6	V	
C_{ELE}	Target electrode capacitance range	1	20	500	pF	1
f_{REFmax}	Reference oscillator frequency	—	8	15	MHz	2, 3
f_{ELEmax}	Electrode oscillator frequency	—	1	1.8	MHz	2, 4
C_{REF}	Internal reference capacitor	—	1	—	pF	
V_{DELTA}	Oscillator delta voltage	—	500	—	mV	2, 5
I_{REF}	Reference oscillator current source base current • 2 μA setting (REFCHRG = 0) • 32 μA setting (REFCHRG = 15)	— —	2 36	3 50	μA	2, 6
I_{ELE}	Electrode oscillator current source base current • 2 μA setting (EXTCHRG = 0) • 32 μA setting (EXTCHRG = 15)	— —	2 36	3 50	μA	2, 7
Pres5	Electrode capacitance measurement precision	—	8.3333	38400	fF/count	8
Pres20	Electrode capacitance measurement precision	—	8.3333	38400	fF/count	9
Pres100	Electrode capacitance measurement precision	—	8.3333	38400	fF/count	10
MaxSens	Maximum sensitivity	0.008	1.46	—	fF/count	11
Res	Resolution	—	—	16	bits	
T_{Con20}	Response time @ 20 pF	8	15	25	μs	12
I_{TSI_RUN}	Current added in run mode	—	55	—	μA	
I_{TSI_LP}	Low power mode current adder	—	1.3	2.5	μA	13

1. The TSI module is functional with capacitance values outside this range. However, optimal performance is not guaranteed.
2. Fixed external capacitance of 20 pF.
3. REFCHRG = 2, EXTCHRG=0.
4. REFCHRG = 0, EXTCHRG = 10.
5. V_{DD} = 3.0 V.
6. The programmable current source value is generated by multiplying the SCANC[REFCHRG] value and the base current.
7. The programmable current source value is generated by multiplying the SCANC[EXTCHRG] value and the base current.
8. Measured with a 5 pF electrode, reference oscillator frequency of 10 MHz, PS = 128, NSCN = 8; Iext = 16.
9. Measured with a 20 pF electrode, reference oscillator frequency of 10 MHz, PS = 128, NSCN = 2; Iext = 16.
10. Measured with a 20 pF electrode, reference oscillator frequency of 10 MHz, PS = 16, NSCN = 3; Iext = 16.
11. Sensitivity defines the minimum capacitance change when a single count from the TSI module changes. Sensitivity depends on the configuration used. The documented values are provided as examples calculated for a specific configuration of operating conditions using the following equation: $(C_{ref} * I_{ext})/(I_{ref} * PS * NSCN)$

    The typical value is calculated with the following configuration:

    $I_{ext} = 6$ µA (EXTCHRG = 2), PS = 128, NSCN = 2, $I_{ref} = 16$ µA (REFCHRG = 7), C_{ref} = 1.0 pF

    The minimum value is calculated with the following configuration:

    $I_{ext} = 2$ µA (EXTCHRG = 0), PS = 128, NSCN = 32, $I_{ref} = 32$ µA (REFCHRG = 15), C_{ref} = 0.5 pF

    The highest possible sensitivity is the minimum value because it represents the smallest possible capacitance that can be measured by a single count.
12. Time to do one complete measurement of the electrode. Sensitivity resolution of 0.0133 pF, PS = 0, NSCN = 0, 1 electrode, EXTCHRG = 7.
13. REFCHRG=0, EXTCHRG=4, PS=7, NSCN=0F, LPSCNITV=F, LPO is selected (1 kHz), and fixed external capacitance of 20 pF. Data is captured with an average of 7 periods window.

7 Dimensions

7.1 Obtaining package dimensions

Package dimensions are provided in package drawings.

To find a package drawing, go to freescale.com and perform a keyword search for the drawing's document number:

If you want the drawing for this package	Then use this document number
80-pin LQFP	98ASS23174W

8 Pinout

8.1 K20 signal multiplexing and pin assignments

The following table shows the signals available on each pin and the locations of these pins on the devices supported by this document. The Port Control Module is responsible for selecting which ALT functionality is available on each pin.

80 LQFP	Pin Name	Default	ALT0	ALT1	ALT2	ALT3	ALT4	ALT5	ALT6	ALT7	EzPort
1	PTE0	ADC1_SE4a	ADC1_SE4a	PTE0	SPI1_PCS1	UART1_TX	SDHC0_D1		I2C1_SDA	RTC_CLKOUT	
2	PTE1/ LLWU_P0	ADC1_SE5a	ADC1_SE5a	PTE1/ LLWU_P0	SPI1_SOUT	UART1_RX	SDHC0_D0		I2C1_SCL	SPI1_SIN	
3	PTE2/ LLWU_P1	ADC1_SE6a	ADC1_SE6a	PTE2/ LLWU_P1	SPI1_SCK	UART1_CTS_b	SDHC0_DCLK				
4	PTE3	ADC1_SE7a	ADC1_SE7a	PTE3	SPI1_SIN	UART1_RTS_b	SDHC0_CMD			SPI1_SOUT	
5	PTE4/ LLWU_P2	DISABLED		PTE4/ LLWU_P2	SPI1_PCS0	UART3_TX	SDHC0_D3				
6	PTE5	DISABLED		PTE5	SPI1_PCS2	UART3_RX	SDHC0_D2				
7	VDD	VDD	VDD								
8	VSS	VSS	VSS								
9	USB0_DP	USB0_DP	USB0_DP								
10	USB0_DM	USB0_DM	USB0_DM								
11	VOUT33	VOUT33	VOUT33								
12	VREGIN	VREGIN	VREGIN								
13	PGA0_DP/ ADC0_DP0/ ADC1_DP3	PGA0_DP/ ADC0_DP0/ ADC1_DP3	PGA0_DP/ ADC0_DP0/ ADC1_DP3								
14	PGA0_DM/ ADC0_DM0/ ADC1_DM3	PGA0_DM/ ADC0_DM0/ ADC1_DM3	PGA0_DM/ ADC0_DM0/ ADC1_DM3								
15	PGA1_DP/ ADC1_DP0/ ADC0_DP3	PGA1_DP/ ADC1_DP0/ ADC0_DP3	PGA1_DP/ ADC1_DP0/ ADC0_DP3								
16	PGA1_DM/ ADC1_DM0/ ADC0_DM3	PGA1_DM/ ADC1_DM0/ ADC0_DM3	PGA1_DM/ ADC1_DM0/ ADC0_DM3								
17	VDDA	VDDA	VDDA								
18	VREFH	VREFH	VREFH								
19	VREFL	VREFL	VREFL								
20	VSSA	VSSA	VSSA								
21	VREF_OUT/ CMP1_IN5/ CMP0_IN5/ ADC1_SE18	VREF_OUT/ CMP1_IN5/ CMP0_IN5/ ADC1_SE18	VREF_OUT/ CMP1_IN5/ CMP0_IN5/ ADC1_SE18								
22	DAC0_OUT/ CMP1_IN3/ ADC0_SE23	DAC0_OUT/ CMP1_IN3/ ADC0_SE23	DAC0_OUT/ CMP1_IN3/ ADC0_SE23								
23	XTAL32	XTAL32	XTAL32								
24	EXTAL32	EXTAL32	EXTAL32								

80 LQFP	Pin Name	Default	ALT0	ALT1	ALT2	ALT3	ALT4	ALT5	ALT6	ALT7	EzPort
25	VBAT	VBAT	VBAT								
26	PTA0	JTAG_TCLK/ SWD_CLK/ EZP_CLK	TSI0_CH1	PTA0	UART0_CTS_ b/ UART0_COL_b	FTM0_CH5				JTAG_TCLK/ SWD_CLK	EZP_CLK
27	PTA1	JTAG_TDI/ EZP_DI	TSI0_CH2	PTA1	UART0_RX	FTM0_CH6				JTAG_TDI	EZP_DI
28	PTA2	JTAG_TDO/ TRACE_SWO/ EZP_DO	TSI0_CH3	PTA2	UART0_TX	FTM0_CH7				JTAG_TDO/ TRACE_SWO	EZP_DO
29	PTA3	JTAG_TMS/ SWD_DIO	TSI0_CH4	PTA3	UART0_RTS_b	FTM0_CH0				JTAG_TMS/ SWD_DIO	
30	PTA4/ LLWU_P3	NMI_b/ EZP_CS_b	TSI0_CH5	PTA4/ LLWU_P3		FTM0_CH1				NMI_b	EZP_CS_b
31	PTA5	DISABLED		PTA5	USB_CLKIN	FTM0_CH2		CMP2_OUT	I2S0_TX_BCLK	JTAG_TRST_b	
32	PTA12	CMP2_IN0	CMP2_IN0	PTA12	CAN0_TX	FTM1_CH0			I2S0_TXD0	FTM1_QD_ PHA	
33	PTA13/ LLWU_P4	CMP2_IN1	CMP2_IN1	PTA13/ LLWU_P4	CAN0_RX	FTM1_CH1			I2S0_TX_FS	FTM1_QD_ PHB	
34	PTA14	DISABLED		PTA14	SPI0_PCS0	UART0_TX			I2S0_RX_BCLK	I2S0_TXD1	
35	PTA15	DISABLED		PTA15	SPI0_SCK	UART0_RX			I2S0_RXD0		
36	PTA16	DISABLED		PTA16	SPI0_SOUT	UART0_CTS_ b/ UART0_COL_b			I2S0_RX_FS	I2S0_RXD1	
37	PTA17	ADC1_SE17	ADC1_SE17	PTA17	SPI0_SIN	UART0_RTS_b			I2S0_MCLK		
38	VDD	VDD	VDD								
39	VSS	VSS	VSS								
40	PTA18	EXTAL0	EXTAL0	PTA18		FTM0_FLT2	FTM_CLKIN0				
41	PTA19	XTAL0	XTAL0	PTA19		FTM1_FLT0	FTM_CLKIN1		LPTMR0_ALT1		
42	RESET_b	RESET_b	RESET_b								
43	PTB0/ LLWU_P5	ADC0_SE8/ ADC1_SE8/ TSI0_CH0	ADC0_SE8/ ADC1_SE8/ TSI0_CH0	PTB0/ LLWU_P5	I2C0_SCL	FTM1_CH0			FTM1_QD_ PHA		
44	PTB1	ADC0_SE9/ ADC1_SE9/ TSI0_CH6	ADC0_SE9/ ADC1_SE9/ TSI0_CH6	PTB1	I2C0_SDA	FTM1_CH1			FTM1_QD_ PHB		
45	PTB2	ADC0_SE12/ TSI0_CH7	ADC0_SE12/ TSI0_CH7	PTB2	I2C0_SCL	UART0_RTS_b			FTM0_FLT3		
46	PTB3	ADC0_SE13/ TSI0_CH8	ADC0_SE13/ TSI0_CH8	PTB3	I2C0_SDA	UART0_CTS_ b/ UART0_COL_b			FTM0_FLT0		
47	PTB10	ADC1_SE14	ADC1_SE14	PTB10	SPI1_PCS0	UART3_RX		FB_AD19	FTM0_FLT1		
48	PTB11	ADC1_SE15	ADC1_SE15	PTB11	SPI1_SCK	UART3_TX		FB_AD18	FTM0_FLT2		
49	VSS	VSS	VSS								
50	VDD	VDD	VDD								
51	PTB16	TSI0_CH9	TSI0_CH9	PTB16	SPI1_SOUT	UART0_RX		FB_AD17	EWM_IN		
52	PTB17	TSI0_CH10	TSI0_CH10	PTB17	SPI1_SIN	UART0_TX		FB_AD16	EWM_OUT_b		

80 LQFP	Pin Name	Default	ALT0	ALT1	ALT2	ALT3	ALT4	ALT5	ALT6	ALT7	EzPort
53	PTB18	TSI0_CH11	TSI0_CH11	PTB18	CAN0_TX	FTM2_CH0	I2S0_TX_BCLK	FB_AD15	FTM2_QD_ PHA		
54	PTB19	TSI0_CH12	TSI0_CH12	PTB19	CAN0_RX	FTM2_CH1	I2S0_TX_FS	FB_OE_b	FTM2_QD_ PHB		
55	PTC0	ADC0_SE14/ TSI0_CH13	ADC0_SE14/ TSI0_CH13	PTC0	SPI0_PCS4	PDB0_EXTRG		FB_AD14	I2S0_TXD1		
56	PTC1/ LLWU_P6	ADC0_SE15/ TSI0_CH14	ADC0_SE15/ TSI0_CH14	PTC1/ LLWU_P6	SPI0_PCS3	UART1_RTS_b	FTM0_CH0	FB_AD13	I2S0_TXD0		
57	PTC2	ADC0_SE4b/ CMP1_IN0/ TSI0_CH15	ADC0_SE4b/ CMP1_IN0/ TSI0_CH15	PTC2	SPI0_PCS2	UART1_CTS_b	FTM0_CH1	FB_AD12	I2S0_TX_FS		
58	PTC3/ LLWU_P7	CMP1_IN1	CMP1_IN1	PTC3/ LLWU_P7	SPI0_PCS1	UART1_RX	FTM0_CH2	CLKOUT	I2S0_TX_BCLK		
59	VSS	VSS	VSS								
60	VDD	VDD	VDD								
61	PTC4/ LLWU_P8	DISABLED		PTC4/ LLWU_P8	SPI0_PCS0	UART1_TX	FTM0_CH3	FB_AD11	CMP1_OUT		
62	PTC5/ LLWU_P9	DISABLED		PTC5/ LLWU_P9	SPI0_SCK	LPTMR0_ALT2	I2S0_RXD0	FB_AD10	CMP0_OUT		
63	PTC6/ LLWU_P10	CMP0_IN0	CMP0_IN0	PTC6/ LLWU_P10	SPI0_SOUT	PDB0_EXTRG	I2S0_RX_BCLK	FB_AD9	I2S0_MCLK		
64	PTC7	CMP0_IN1	CMP0_IN1	PTC7	SPI0_SIN	USB_SOF_ OUT	I2S0_RX_FS	FB_AD8			
65	PTC8	ADC1_SE4b/ CMP0_IN2	ADC1_SE4b/ CMP0_IN2	PTC8			I2S0_MCLK	FB_AD7			
66	PTC9	ADC1_SE5b/ CMP0_IN3	ADC1_SE5b/ CMP0_IN3	PTC9			I2S0_RX_BCLK	FB_AD6	FTM2_FLT0		
67	PTC10	ADC1_SE6b	ADC1_SE6b	PTC10	I2C1_SCL		I2S0_RX_FS	FB_AD5			
68	PTC11/ LLWU_P11	ADC1_SE7b	ADC1_SE7b	PTC11/ LLWU_P11	I2C1_SDA		I2S0_RXD1	FB_RW_b			
69	VSS	VSS	VSS								
70	VDD	VDD	VDD								
71	PTC16	DISABLED		PTC16	CAN1_RX	UART3_RX		FB_CS5_b/ FB_TSIZ1/ FB_BE23_16_b			
72	PTC17	DISABLED		PTC17	CAN1_TX	UART3_TX		FB_CS4_b/ FB_TSIZ0/ FB_BE31_24_b			
73	PTD0/ LLWU_P12	DISABLED		PTD0/ LLWU_P12	SPI0_PCS0	UART2_RTS_b		FB_ALE/ FB_CS1_b/ FB_TS_b			
74	PTD1	ADC0_SE5b	ADC0_SE5b	PTD1	SPI0_SCK	UART2_CTS_b		FB_CS0_b			
75	PTD2/ LLWU_P13	DISABLED		PTD2/ LLWU_P13	SPI0_SOUT	UART2_RX		FB_AD4			
76	PTD3	DISABLED		PTD3	SPI0_SIN	UART2_TX		FB_AD3			
77	PTD4/ LLWU_P14	DISABLED		PTD4/ LLWU_P14	SPI0_PCS1	UART0_RTS_b	FTM0_CH4	FB_AD2	EWM_IN		

80 LQFP	Pin Name	Default	ALT0	ALT1	ALT2	ALT3	ALT4	ALT5	ALT6	ALT7	EzPort
78	PTD5	ADC0_SE6b	ADC0_SE6b	PTD5	SPI0_PCS2	UART0_CTS_b/ UART0_COL_b	FTM0_CH5	FB_AD1	EWM_OUT_b		
79	PTD6/ LLWU_P15	ADC0_SE7b	ADC0_SE7b	PTD6/ LLWU_P15	SPI0_PCS3	UART0_RX	FTM0_CH6	FB_AD0	FTM0_FLT0		
80	PTD7	DISABLED		PTD7	CMT_IRO	UART0_TX	FTM0_CH7		FTM0_FLT1		

8.2 K20 pinouts

The figure below shows the pinout diagram for the devices supported by this document. Many signals may be multiplexed onto a single pin. To determine what signals can be used on which pin, see the previous section.

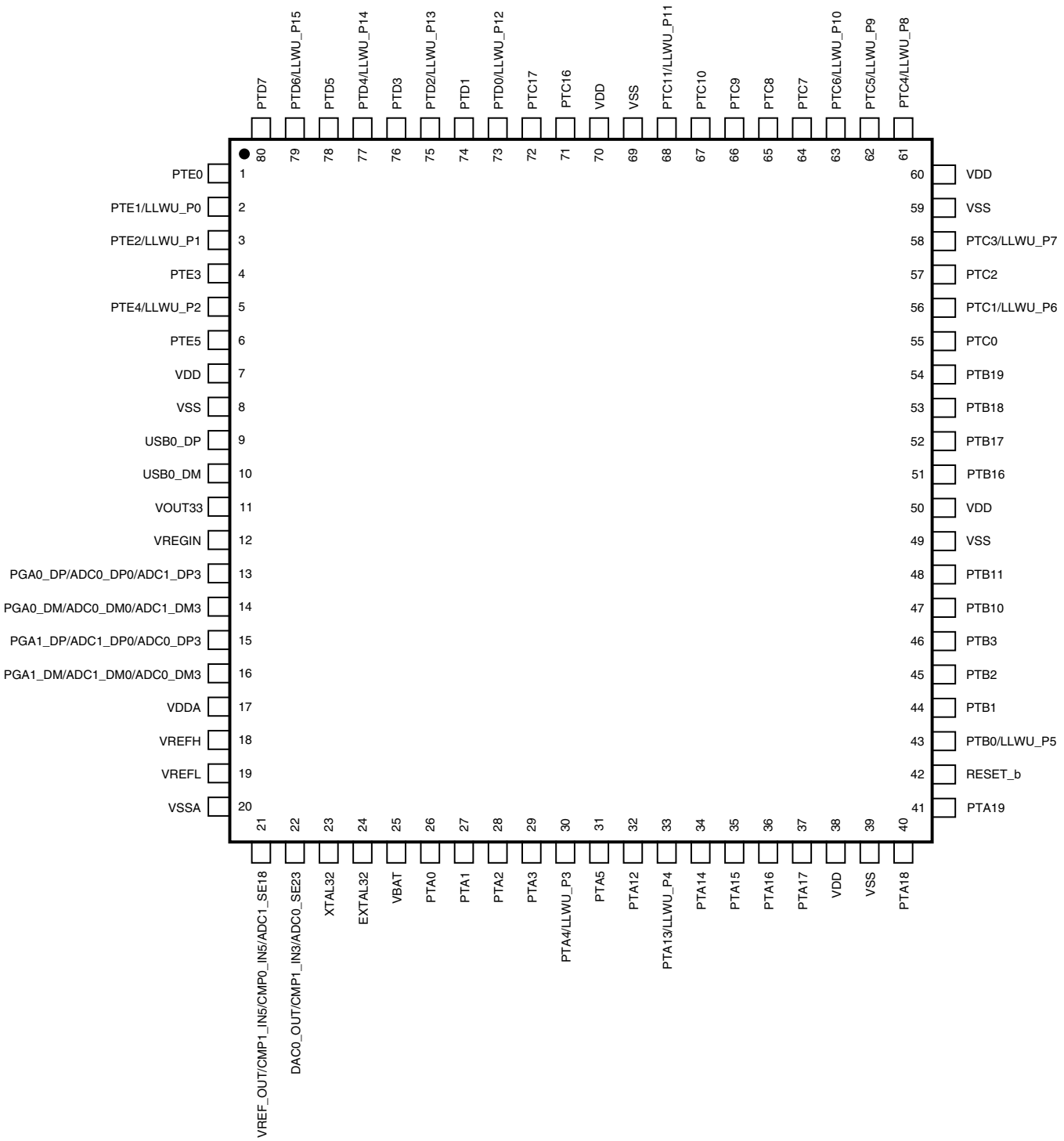

Figure 31. K20 80 LQFP Pinout Diagram

9 Revision history

The following table provides a revision history for this document.

Table 53. Revision history

Rev. No.	Date	Substantial Changes
1	6/2012	Initial public revision
2	12/2012	Replaced TBDs throughout.
3	6/2013	• In ESD handling ratings, added a note for ILAT. • Updated "Voltage and current operating requirements" Table 1. • Updated I_{OL} data for V_{OL} row in "Voltage and current operating behaviors" Table 4. • Updated wakeup times and t_{POR} value in "Power mode transition operating behaviors" Table 5. • In "EMC radiated emissions operating behaviors . . ." Table 7, added a column for 144MAPBGA. • In "16-bit ADC operating conditions" Table 27, updated the max spec of VADIN. • In "16-bit ADC electrical characteristics" Table 28, updated the temp sensor slope and voltage specs. • Updated Inter-Integrated Circuit Interface (I^2C) timing. • In SDHC specifications, added operating voltage row.

How to Reach Us:

Home Page:
freescale.com

Web Support:
freescale.com/support

Information in this document is provided solely to enable system and software implementers to use Freescale products. There are no express or implied copyright licenses granted hereunder to design or fabricate any integrated circuits based on the information in this document.

Freescale reserves the right to make changes without further notice to any products herein. Freescale makes no warranty, representation, or guarantee regarding the suitability of its products for any particular purpose, nor does Freescale assume any liability arising out of the application or use of any product or circuit, and specifically disclaims any and all liability, including without limitation consequential or incidental damages. “Typical” parameters that may be provided in Freescale data sheets and/or specifications can and do vary in different applications, and actual performance may vary over time. All operating parameters, including “typicals,” must be validated for each customer application by customer’s technical experts. Freescale does not convey any license under its patent rights nor the rights of others. Freescale sells products pursuant to standard terms and conditions of sale, which can be found at the following address: freescale.com/SalesTermsandConditions.

Freescale, the Freescale logo, AltiVec, C-5, CodeTest, CodeWarrior, ColdFire, C-Ware, Energy Efficient Solutions logo, Kinetis, mobileGT, PowerQUICC, Processor Expert, QorIQ, Qorivva, StarCore, Symphony, and VortiQa are trademarks of Freescale Semiconductor, Inc., Reg. U.S. Pat. & Tm. Off. Airfast, BeeKit, BeeStack, ColdFire+, CoreNet, Flexis, MagniV, MXC, Platform in a Package, QorIQ Qonverge, QUICC Engine, Ready Play, SafeAssure, SMARTMOS, TurboLink, Vybrid, and Xtrinsic are trademarks of Freescale Semiconductor, Inc. All other product or service names are the property of their respective owners. ARM, the ARM powered logo, and Coretx are the registered trademarks of ARM Limited
© 2012–2013Freescale Semiconductor, Inc.

Document Number: K20P81M100SF2V2
Rev. 3
06/2013

How to Reach Us:

Home Page:
nxp.com

Web Support:
nxp.com/support

Information in this document is provided solely to enable system and software implementers to use NXP products. There are no express or implied copyright licenses granted hereunder to design or fabricate any integrated circuits based on the information in this document. NXP reserves the right to make changes without further notice to any products herein.

NXP makes no warranty, representation, or guarantee regarding the suitability of its products for any particular purpose, nor does NXP assume any liability arising out of the application or use of any product or circuit, and specifically disclaims any and all liability, including without limitation consequential or incidental damages. “Typical” parameters that may be provided in NXP data sheets and/or specifications can and do vary in different applications, and actual performance may vary over time. All operating parameters, including “typicals” must be validated for each customer application by customer’s technical experts. NXP does not convey any license under its patent rights nor the rights of others. NXP sells products pursuant to standard terms and conditions of sale, which can be found at the following address: nxp.com/SalesTermsandConditions.

NXP, the NXP logo, NXP SECURE CONNECTIONS FOR A SMARTER WORLD, Freescale, the Freescale logo, and Kinetis are trademarks of NXP B.V. All other product or service names are the property of their respective owners. Arm, the Arm logo, and Cortex are registered trademarks of Arm Limited (or its subsidiaries) in the EU and/or elsewhere. All rights reserved.

© 2017 NXP B.V.

Document Number: K20P81M100SF2V2
Rev 4, 09/2017