STF4N62K3, STFI4N62K3, STI4N62K3, STP4N62K3, STU4N62K3

N-channel 620 V, 1.7 Ω typ., 3.8 A SuperMESH3™ Power MOSFET in TO-220FP, I²PAKFP, I²PAK, TO-220 and IPAK packages

Datasheet — production data

Features

Order codes	V_{DSS}	$R_{DS(on)}$ max	I_D	P_{TOT}
STF4N62K3	620 V	< 2 Ω	3.8 A	25 W
STFI4N62K3				25 W
STI4N62K3				70 W
STP4N62K3				70 W
STU4N62K3				70 W

- 100% avalanche tested
- Extremely high dv/dt capability
- Gate charge minimized
- Very low intrinsic capacitance
- Improved diode reverse recovery characteristics
- Zener-protected

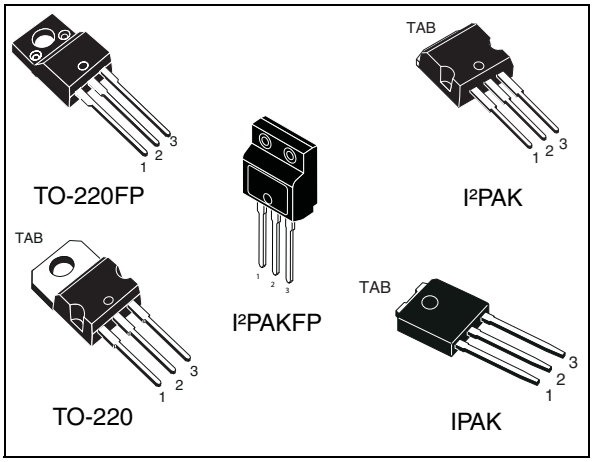

Figure 1. Internal schematic diagram

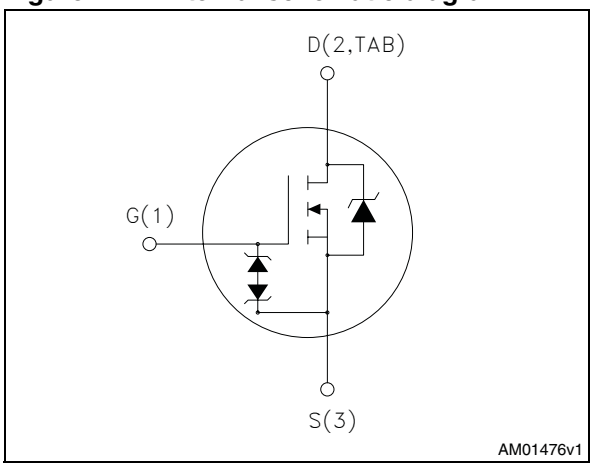

Applications

- Switching applications

Description

These SuperMESH3™ Power MOSFETs are the result of improvements applied to STMicroelectronics' SuperMESH™ technology, combined with a new optimized vertical structure. These devices boast an extremely low on-resistance, superior dynamic performance and high avalanche capability, rendering them suitable for the most demanding applications.

Table 1. Device summary

Order codes	Marking	Package	Packaging
STF4N62K3	4N62K3	TO-220FP	Tube
STFI4N62K3		I²PAKFP	
STI4N62K3		I²PAK	
STP4N62K3		TO-220	
STU4N62K3		IPAK	

This is information on a product in full production. www.st.com

Contents

1 Electrical ratings 3

2 Electrical characteristics 4

2.1 Electrical characteristics (curves) 6

3 Test circuits 9

4 Package mechanical data 10

5 Revision history 18

1 Electrical ratings

Table 2. Absolute maximum ratings

Symbol	Parameter	Value			Unit
		TO-220FP I²PAKFP	I²PAK TO-220	IPAK	
V_{DS}	Drain-source voltage	620			V
V_{GS}	Gate- source voltage	± 30			V
I_D	Drain current (continuous) at T_C = 25 °C	3.8 (1)	3.8		A
I_D	Drain current (continuous) at T_C = 100 °C	2 (1)	2		A
I_{DM} (2)	Drain current (pulsed)	15.2 (1)	15.2		A
P_{TOT}	Total dissipation at T_C = 25 °C	25	70		W
I_{AR}	Avalanche current, repetitive or not-repetitive (pulse width limited by T_j max)	3.8			A
E_{AS}	Single pulse avalanche energy (starting T_j = 25°C, I_D = I_{AR}, V_{DD} = 50V)	115			mJ
ESD	Gate-source human body model (R = 1.5 kΩ, C = 100 pF)	2.5			kV
dv/dt (3)	Peak diode recovery voltage slope	12			V/ns
V_{ISO}	Insulation withstand voltage (RMS) from all three leads to external heat sink (t = 1 s; Tc = 25 °C)	2500			V
T_{stg}	Storage temperature	- 55 to 150			°C
T_j	Max. operating junction temperature	150			°C

1. Limited by maximum junction temperature.
2. Pulse width limited by safe operating area.
3. I_{SD} ≤ 3.8 A, di/dt = 400 A/µs, V_{DD} = 80% $V_{(BR)DSS}$, $V_{DS\ peak}$ ≤ $V_{(BR)DSS}$.

Table 3. Thermal data

Symbol	Parameter	Value			Unit
		TO-220FP I²PAKFP	I²PAK TO-220	IPAK	
$R_{thj-case}$	Thermal resistance junction-case max	5	1.79		°C/W
$R_{thj-amb}$	Thermal resistance junction-ambient max	62.5			°C/W

2 Electrical characteristics

(T_C = 25 °C unless otherwise specified)

Table 4. On /off states

Symbol	Parameter	Test conditions	Min.	Typ.	Max.	Unit
$V_{(BR)DSS}$	Drain-source breakdown voltage	I_D = 1 mA, V_{GS} = 0	620			V
I_{DSS}	Zero gate voltage drain current (V_{GS} = 0)	V_{DS} = 620 V V_{DS} = 620V, T_C=125 °C			1 50	µA µA
I_{GSS}	Gate-body leakage current (V_{DS} = 0)	V_{GS} = ± 20 V			± 10	µA
$V_{GS(th)}$	Gate threshold voltage	V_{DS} = V_{GS}, I_D = 50 µA	3	3.75	4.5	V
$R_{DS(on}$	Static drain-source on resistance	V_{GS} = 10 V, I_D = 1.9 A		1.7	2	Ω

Table 5. Dynamic

Symbol	Parameter	Test conditions	Min.	Typ.	Max.	Unit
C_{iss} C_{oss} C_{rss}	Input capacitance Output capacitance Reverse transfer capacitance	V_{DS} = 50 V, f = 1 MHz, V_{GS} = 0		550 42 7		pF pF pF
$C_{oss\ eq.}$ (1)	Equivalent output capacitance	V_{DS} = 0 to 496 V, V_{GS} = 0		27		pF
R_G	Intrinsic gate resistance	f = 1 MHz open drain	2	5	10	Ω
Q_g Q_{gs} Q_{gd}	Total gate charge Gate-source charge Gate-drain charge	V_{DD} = 496 V, I_D = 3.8 A, V_{GS} = 10 V (see *Figure 20*)		22 4 13		nC nC nC

1. $C_{oss\ eq.}$ is defined as a constant equivalent capacitance giving the same charging time as C_{oss} when V_{DS} increases from 0 to 80% V_{DSS}

Table 6. Switching times

Symbol	Parameter	Test conditions	Min.	Typ.	Max.	Unit
$t_{d(on)}$ t_r $t_{d(off)}$ t_f	Turn-on delay time Rise time Turn-off-delay time Fall time	V_{DD} = 300 V, I_D = 1.9 A, R_G = 4.7 Ω, V_{GS} = 10 V (see *Figure 19*)	-	10 9 29 19	-	ns ns ns ns

Table 7. Source drain diode

Symbol	Parameter	Test conditions	Min.	Typ.	Max.	Unit
I_{SD} I_{SDM} (1)	Source-drain current Source-drain current (pulsed)		-		3.8 15.2	A A
V_{SD} (2)	Forward on voltage	I_{SD} = 3.8 A, V_{GS} = 0	-		1.6	V
t_{rr} Q_{rr} I_{RRM}	Reverse recovery time Reverse recovery charge Reverse recovery current	I_{SD} = 3.8 A, di/dt = 100 A/µs V_{DD} = 60 V (see *Figure 24*)	-	220 1.4 13		ns µC A
t_{rr} Q_{rr} I_{RRM}	Reverse recovery time Reverse recovery charge Reverse recovery current	I_{SD} = 3.8 A, di/dt = 100 A/µs V_{DD} = 60 V, T_j = 150 °C (see *Figure 24*)	-	270 1.9 14		ns µC A

1. Pulse width limited by safe operating area
2. Pulsed: Pulse duration = 300 µs, duty cycle 1.5%

Table 8. Gate-source Zener diode

Symbol	Parameter	Test conditions	Min.	Typ.	Max.	Unit
$V_{(BR)GSO}$	Gate-source breakdown voltage (ID = 0)	Igs= ± 1 mA	30	-		V

The built-in back-to-back Zener diodes have specifically been designed to enhance not only the device's ESD capability, but also to make them safely absorb possible voltage transients that may occasionally be applied from gate to source. In this respect the Zener voltage is appropriate to achieve an efficient and cost-effective intervention to protect the device's integrity. These integrated Zener diodes thus avoid the usage of external components.

2.1 Electrical characteristics (curves)

Figure 2. Safe operating area for TO-220, I²PAK

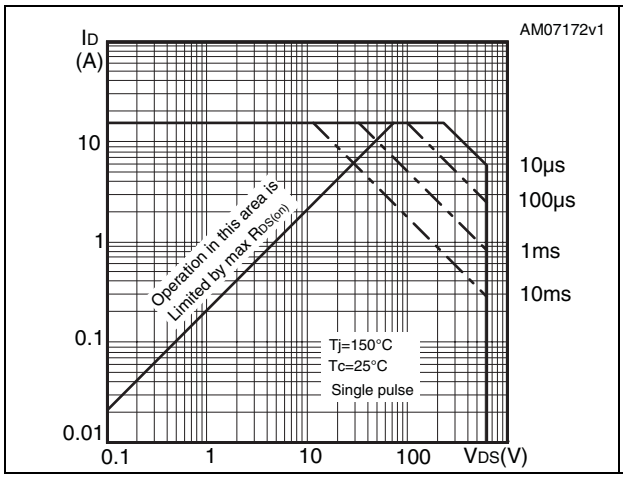

Figure 3. Thermal impedance for TO-220, I²PAK

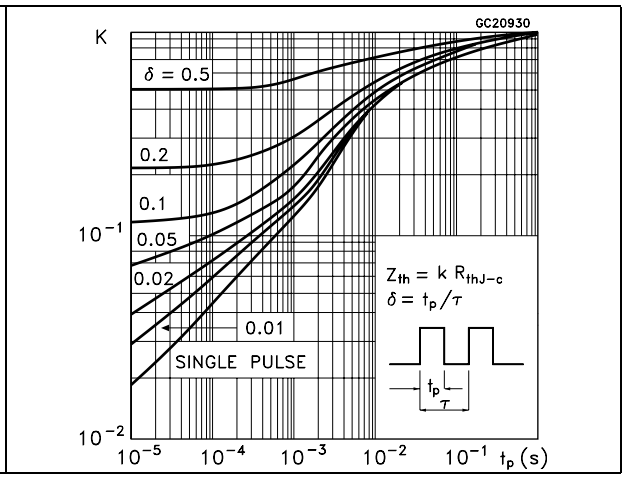

Figure 4. Safe operating area for TO-220FP, I²PAKFP

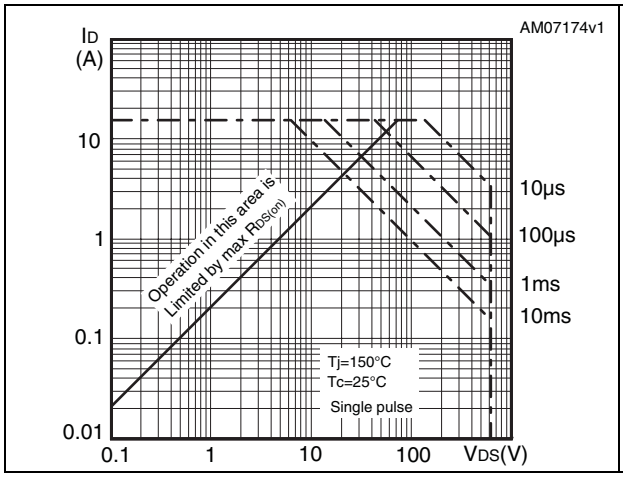

Figure 5. Thermal impedance for TO-220FP, I²PAKFP

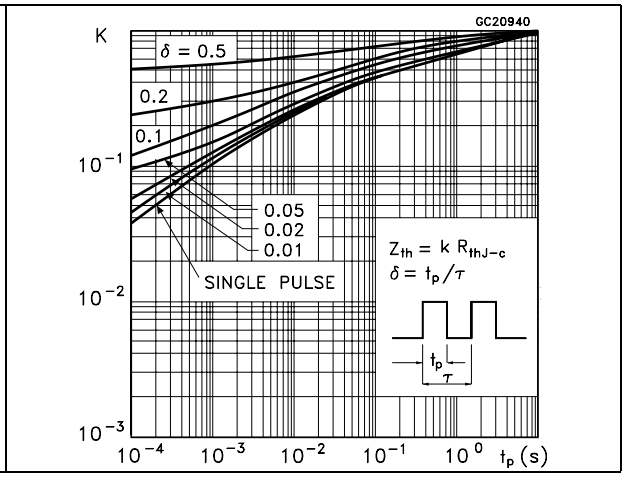

Figure 6. Safe operating area for IPAK

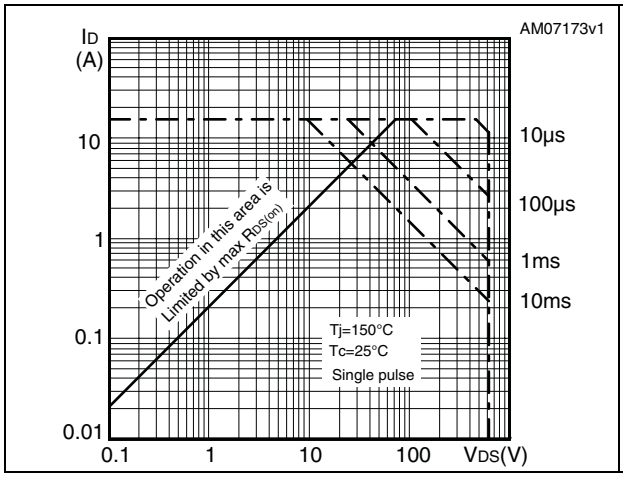

Figure 7. Thermal impedance for IPAK

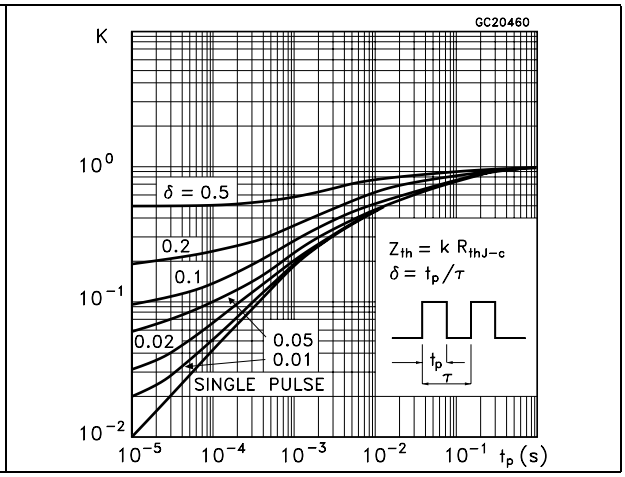

Figure 8. Output characteristics

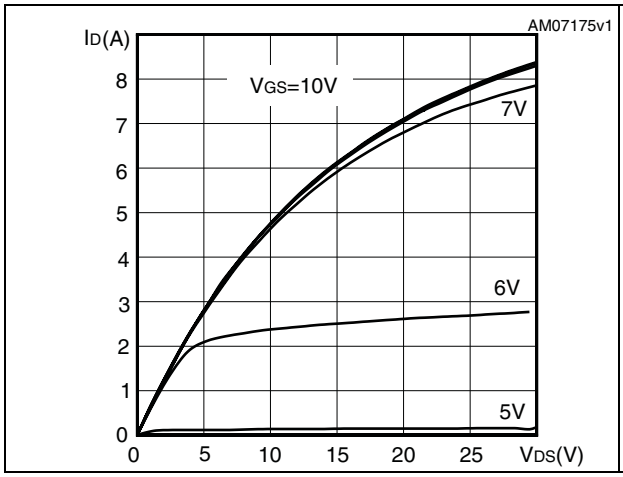

Figure 9. Transfer characteristics

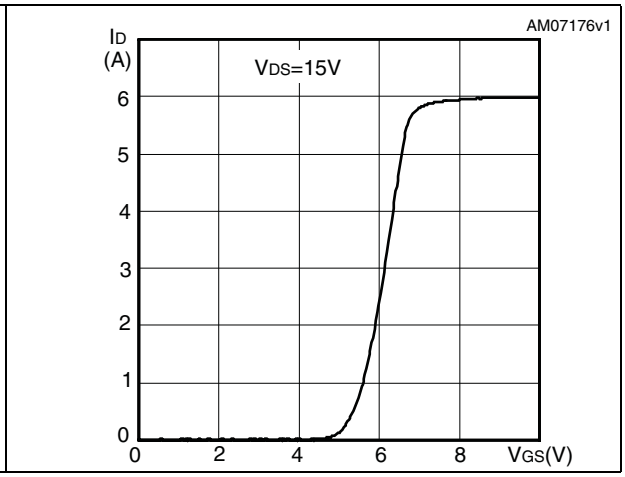

Figure 10. Gate charge vs gate-source voltage

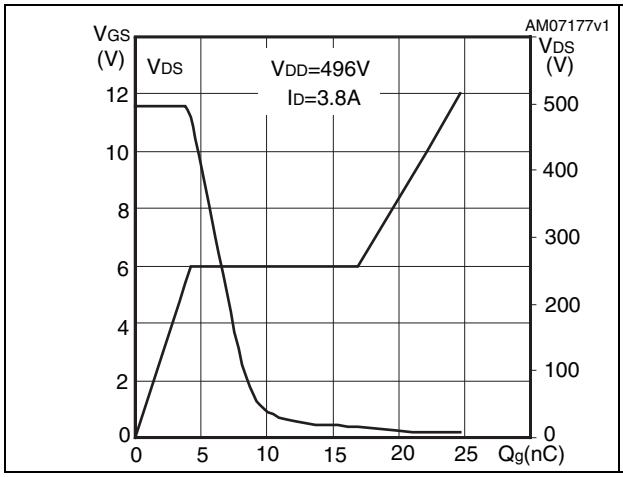

Figure 11. Static drain-source on resistance

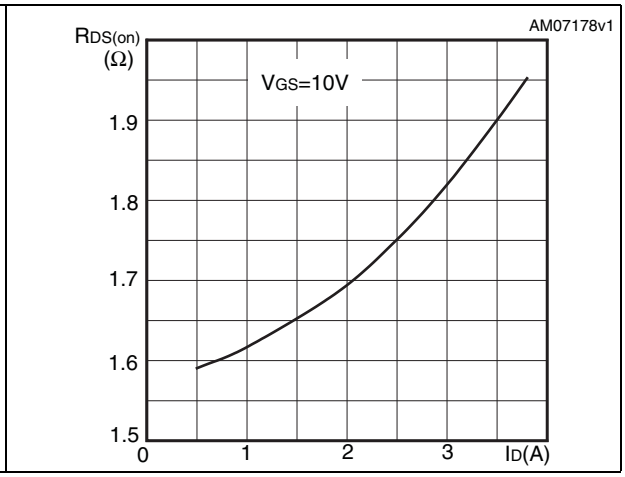

Figure 12. Capacitance variations

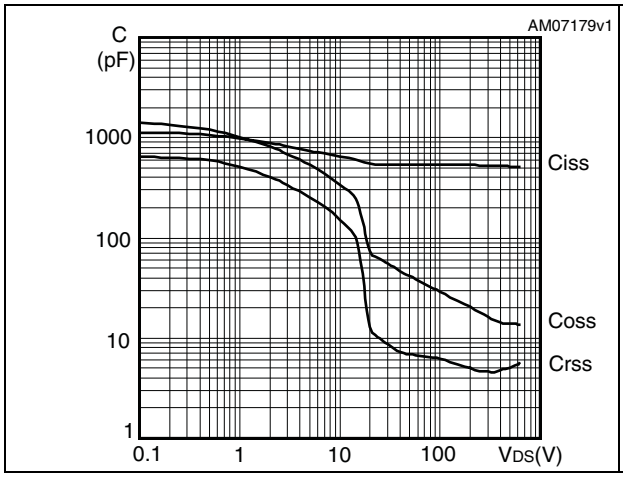

Figure 13. Output capacitance stored energy

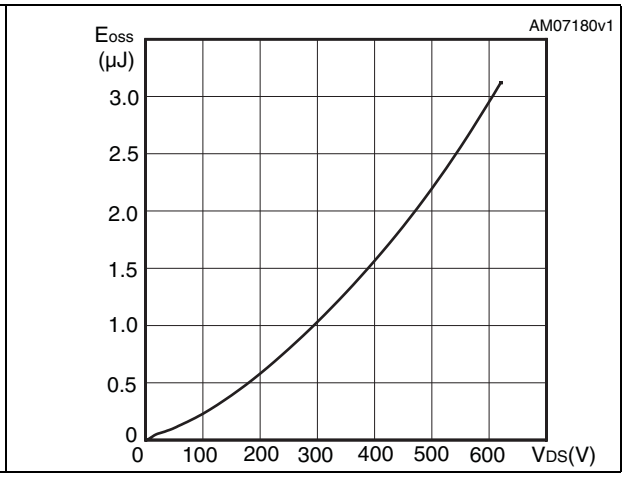

Figure 14. Normalized gate threshold voltage vs temperature

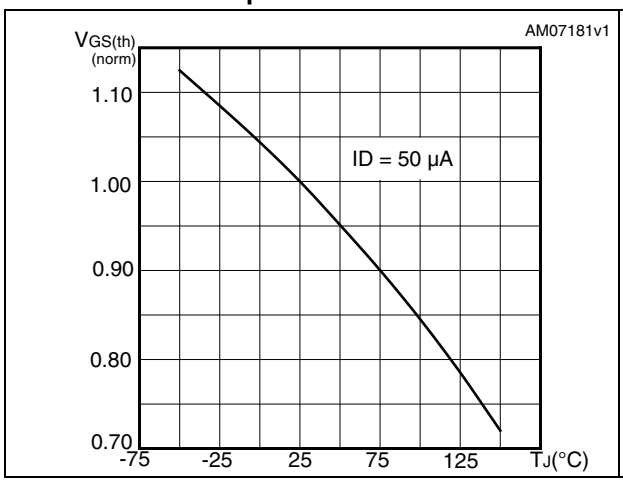

Figure 15. Normalized on resistance vs temperature

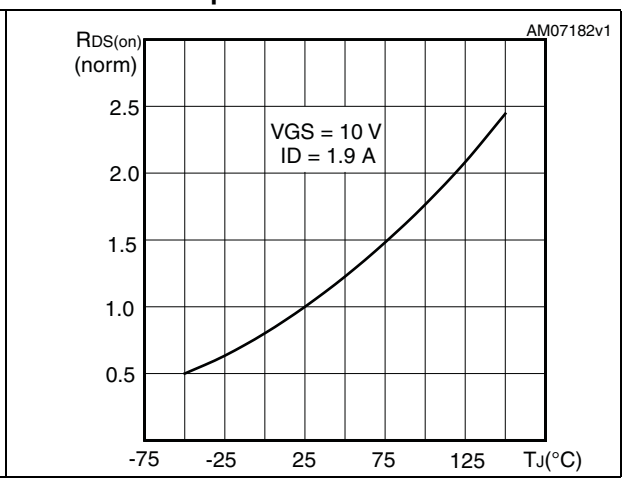

Figure 16. Maximum avalanche energy vs starting Tj

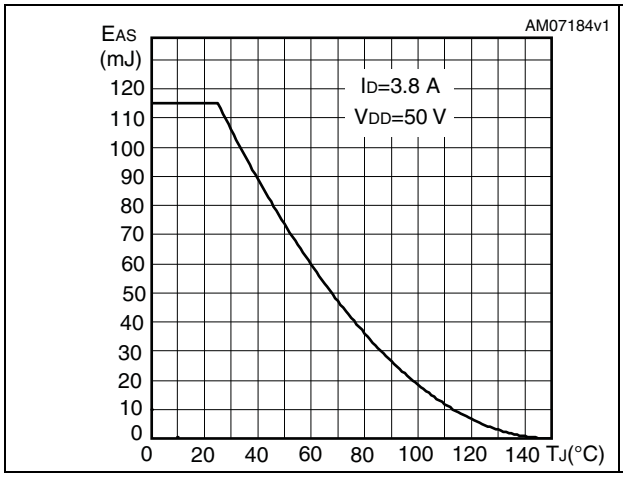

Figure 17. Normalized B_{VDSS} vs temperature

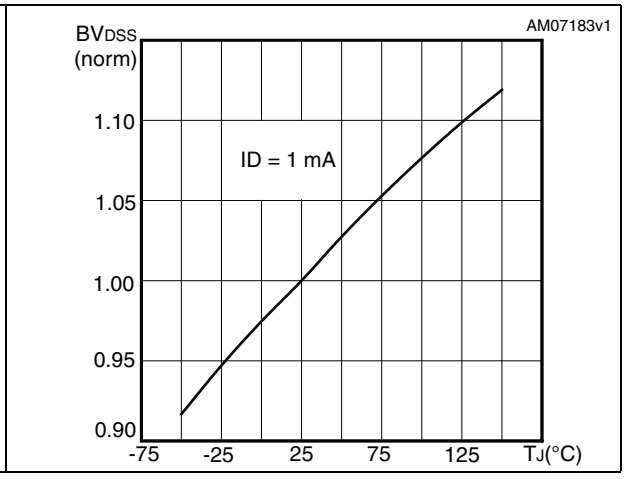

Figure 18. Source-drain diode forward characteristics

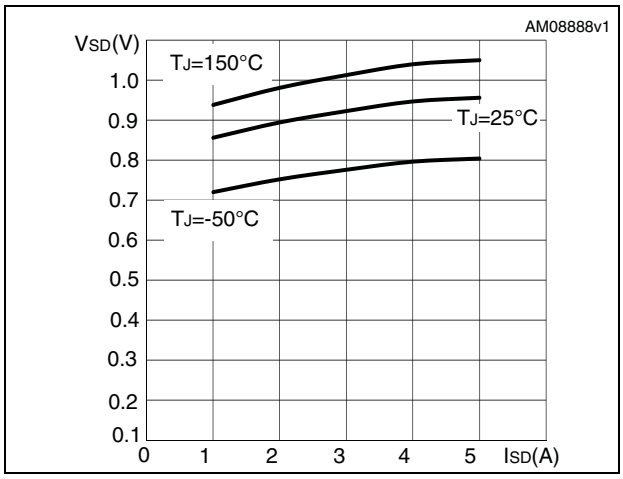

3 Test circuits

Figure 19. Switching times test circuit for resistive load

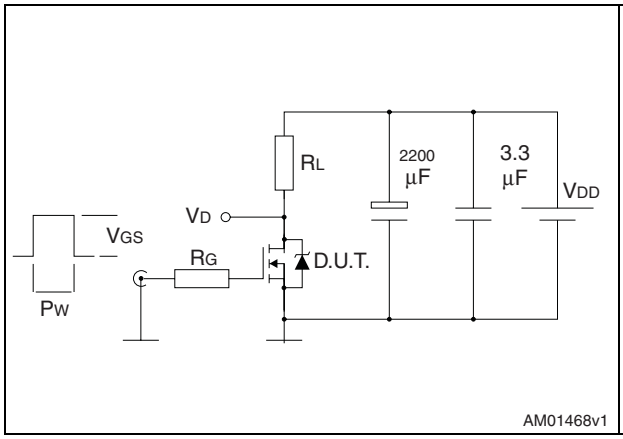

Figure 20. Gate charge test circuit

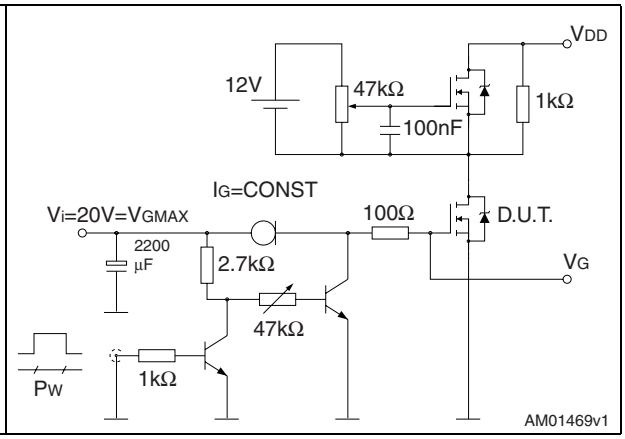

Figure 21. Test circuit for inductive load switching and diode recovery times

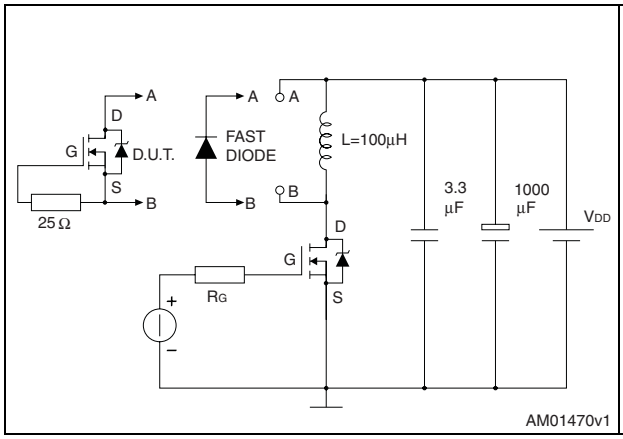

Figure 22. Unclamped inductive load test circuit

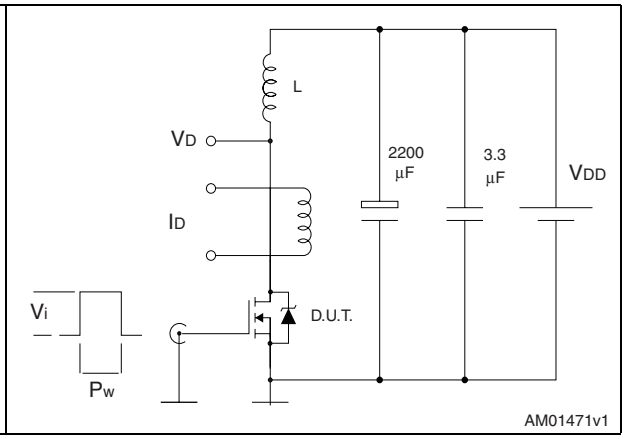

Figure 23. Unclamped inductive waveform

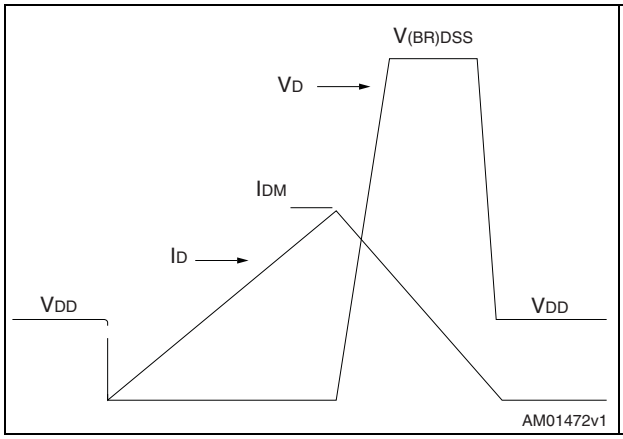

Figure 24. Switching time waveform

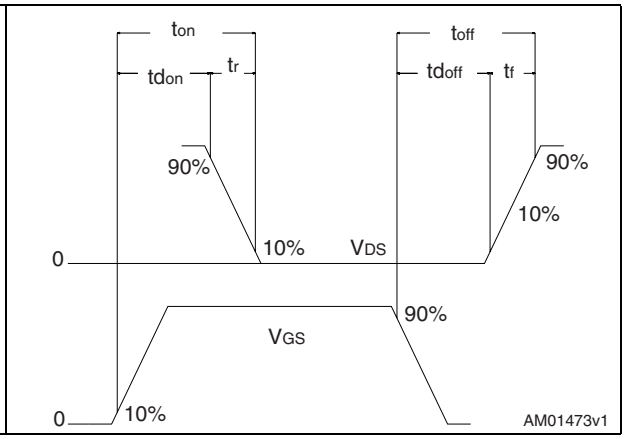

4 Package mechanical data

In order to meet environmental requirements, ST offers these devices in different grades of ECOPACK® packages, depending on their level of environmental compliance. ECOPACK® specifications, grade definitions and product status are available at: www.st.com. ECOPACK is an ST trademark.

Table 9. TO-220FP mechanical data

Dim.	mm		
	Min.	Typ.	Max.
A	4.4		4.6
B	2.5		2.7
D	2.5		2.75
E	0.45		0.7
F	0.75		1
F1	1.15		1.70
F2	1.15		1.70
G	4.95		5.2
G1	2.4		2.7
H	10		10.4
L2		16	
L3	28.6		30.6
L4	9.8		10.6
L5	2.9		3.6
L6	15.9		16.4
L7	9		9.3
Dia	3		3.2

Figure 25. TO-220FP drawing

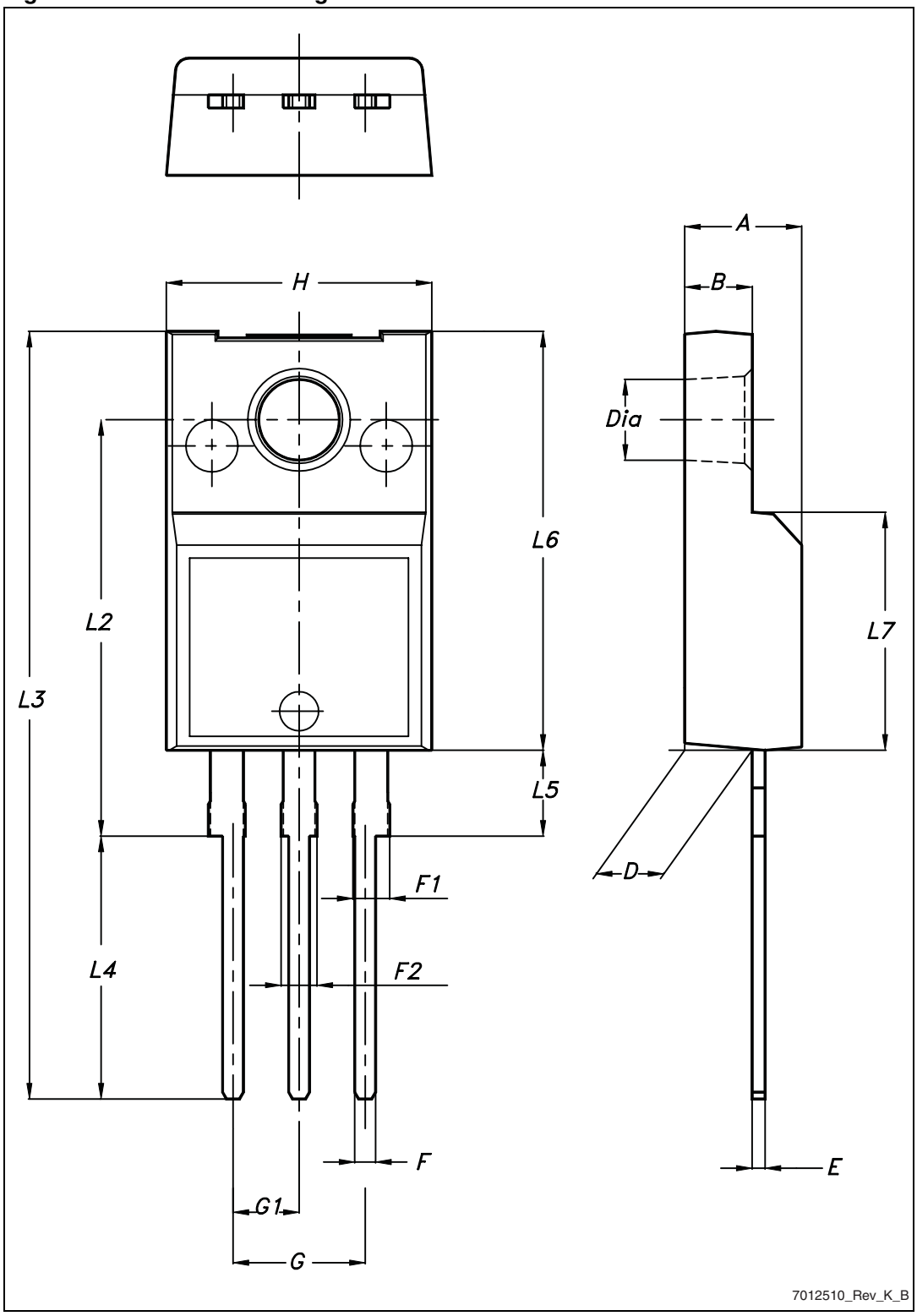

Table 10. I^2PAKFP (TO-281) mechanical data

Dim.	mm		
	Min.	Typ.	Max.
A	4.40		4.60
B	2.50		2.70
D	2.50		2.75
D1	0.65		0.85
E	0.45		0.70
F	0.75		1.00
F1			1.20
G	4.95	-	5.20
H	10.00		10.40
L1	21.00		23.00
L2	13.20		14.10
L3	10.55		10.85
L4	2.70		3.20
L5	0.85		1.25
L6	7.30		7.50

Figure 26. I^2PAKFP (TO-281) drawing

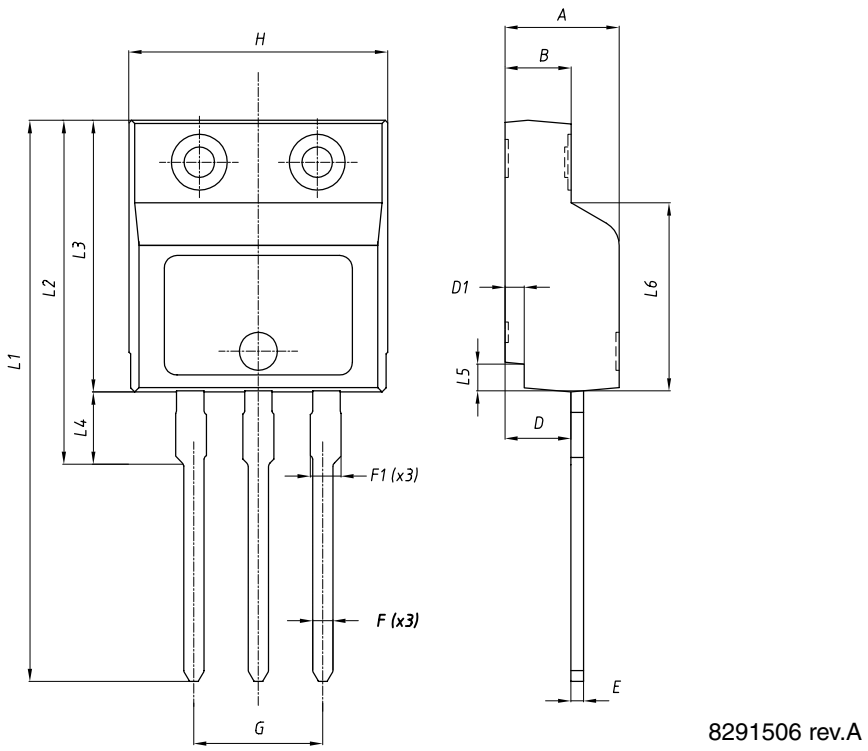

Table 11. I²PAK (TO-262) mechanical data

DIM.	mm.		
	min.	typ	max.
A	4.40		4.60
A1	2.40		2.72
b	0.61		0.88
b1	1.14		1.70
c	0.49		0.70
c2	1.23		1.32
D	8.95		9.35
e	2.40		2.70
e1	4.95		5.15
E	10		10.40
L	13		14
L1	3.50		3.93
L2	1.27		1.40

Figure 27. I²PAK (TO-262) drawing

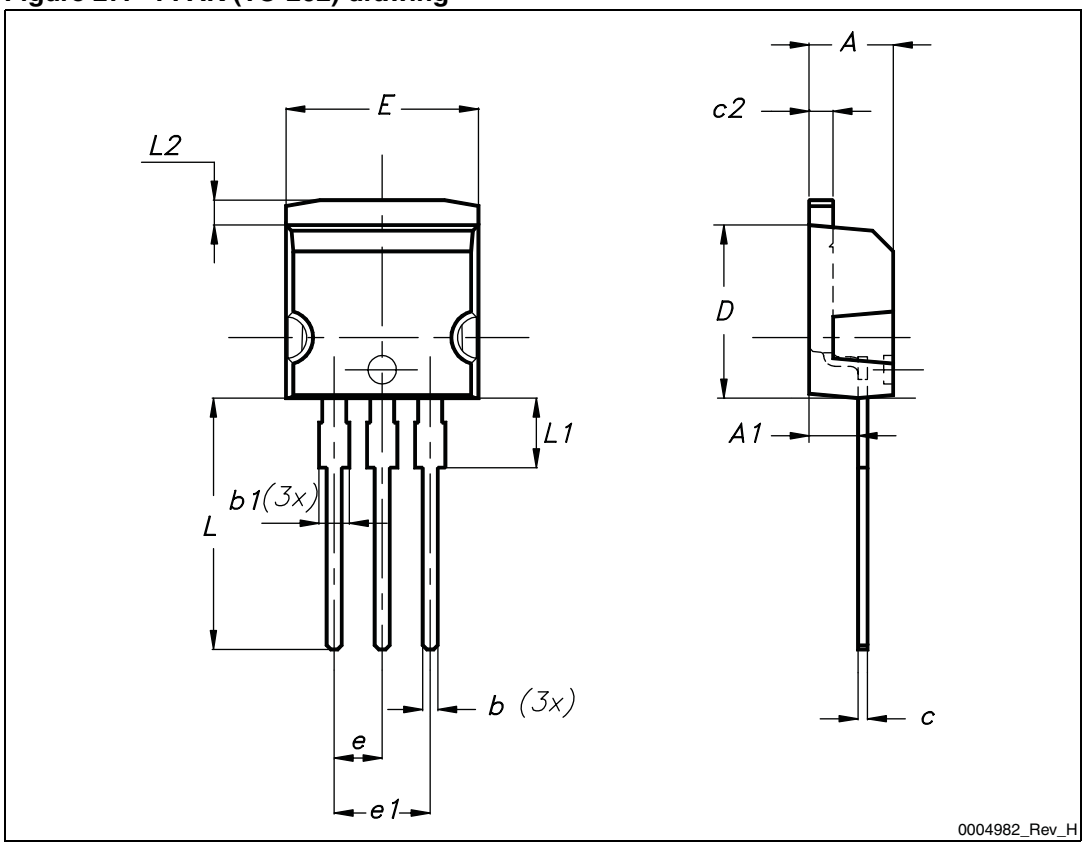

Table 12. TO-220 type A mechanical data

Dim.	mm		
	Min.	Typ.	Max.
A	4.40		4.60
b	0.61		0.88
b1	1.14		1.70
c	0.48		0.70
D	15.25		15.75
D1		1.27	
E	10		10.40
e	2.40		2.70
e1	4.95		5.15
F	1.23		1.32
H1	6.20		6.60
J1	2.40		2.72
L	13		14
L1	3.50		3.93
L20		16.40	
L30		28.90	
∅P	3.75		3.85
Q	2.65		2.95

Figure 28. TO-220 type A drawing

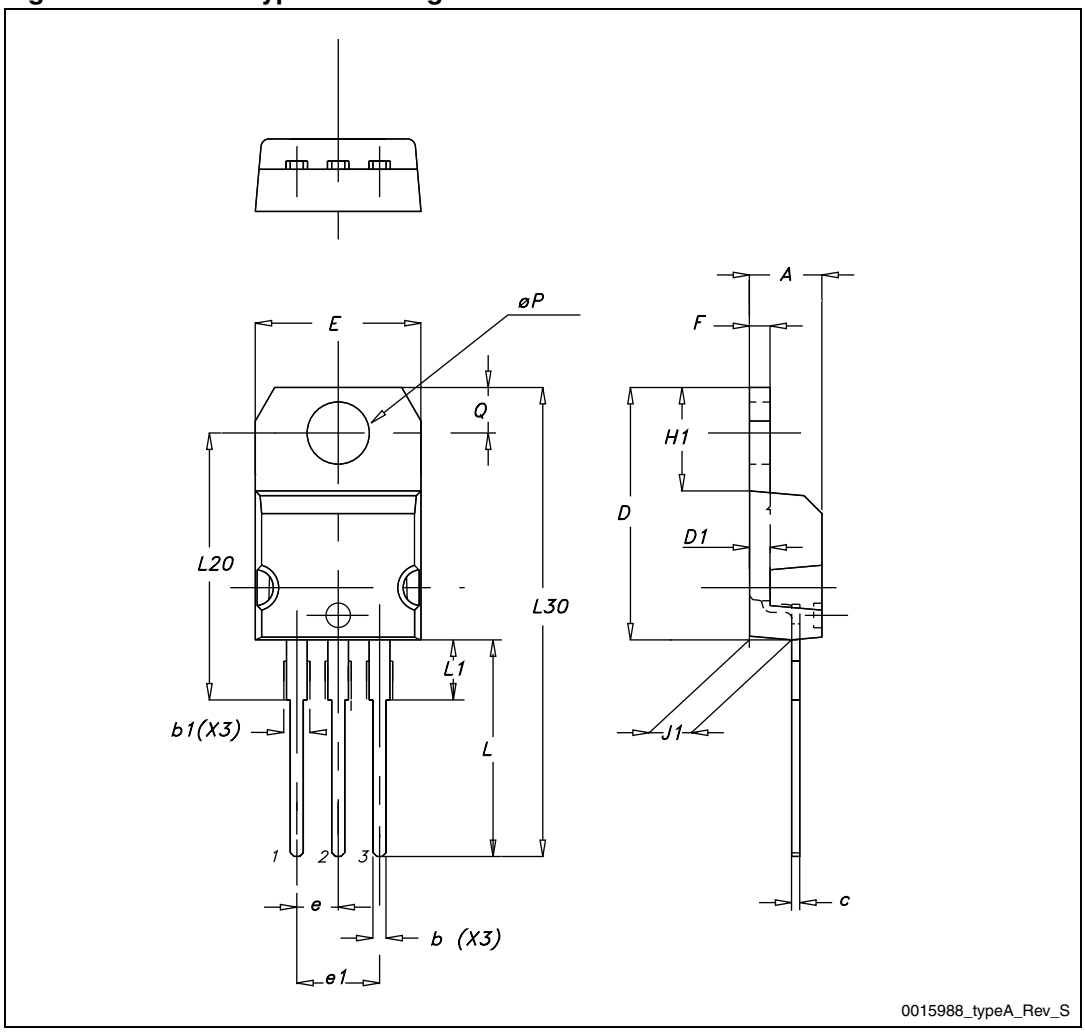

Table 13. IPAK (TO-251) mechanical data

DIM	mm.		
	min.	typ.	max.
A	2.20		2.40
A1	0.90		1.10
b	0.64		0.90
b2			0.95
b4	5.20		5.40
B5		0.30	
c	0.45		0.60
c2	0.48		0.60
D	6.00		6.20
E	6.40		6.60
e		2.28	
e1	4.40		4.60
H		16.10	
L	9.00		9.40
L1	0.80		1.20
L2		0.80	1.00
V1		10°	

Figure 29. IPAK (TO-251) drawing

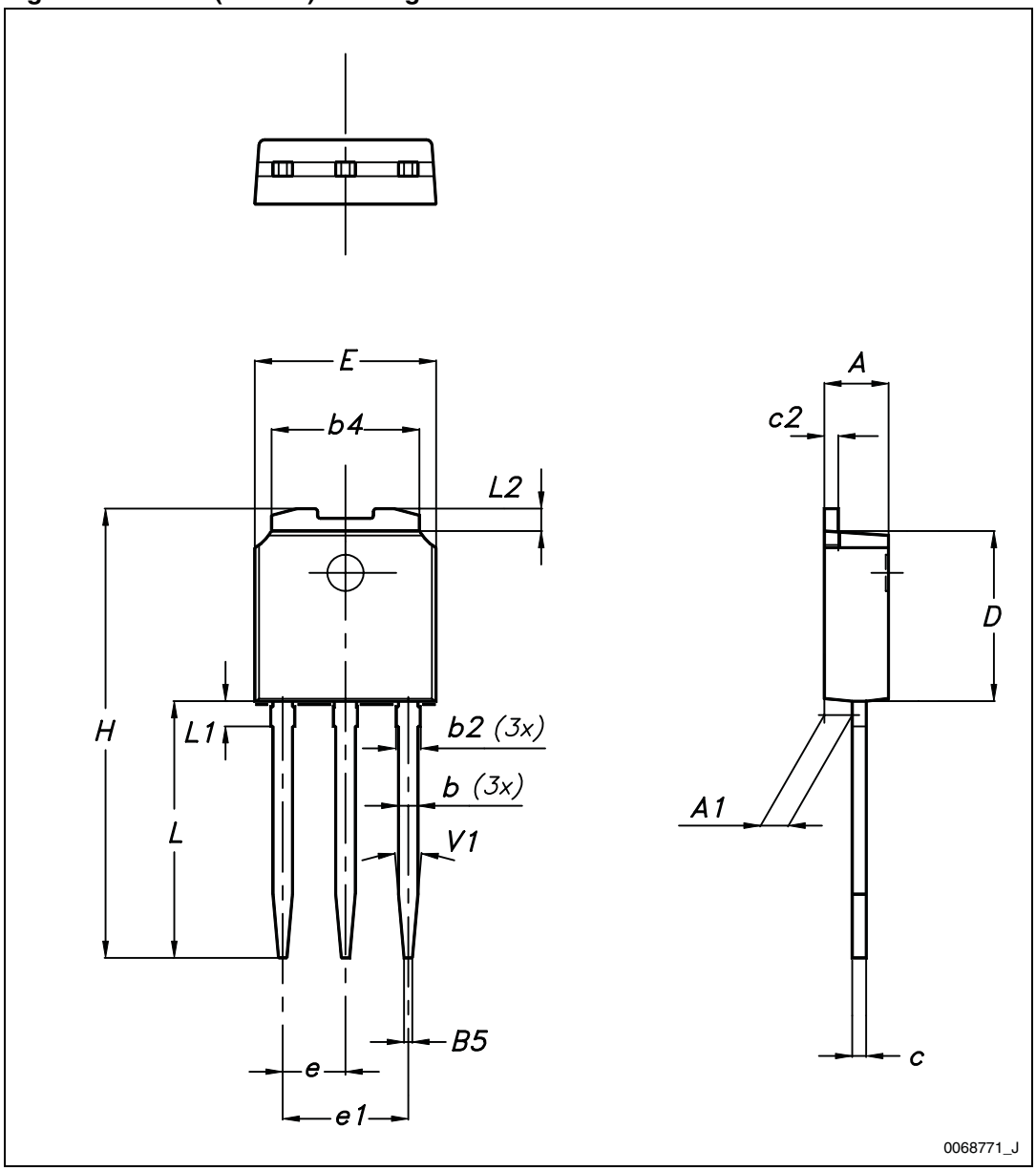

5 Revision history

Table 14. Document revision history

Date	Revision	Changes
05-May-2010	1	First release
16-Dec-2010	2	Document status promoted from preliminary data to datasheet.
27-Mar-2012	3	Inserted max and min. values for R_G in *Table 5*. Updated *Section 4: Package mechanical data*.
07-Aug-2012	4	Added package, mechanical data: I²PAKFP. Updated *Table 1: Device summary*, *Table 2: Absolute maximum ratings*, *Table 3: Thermal data*, *Table 4: On /off states*, *Table 13: IPAK (TO-251) mechanical data* and *Figure 29: IPAK (TO-251) drawing* Minor text changes.

Please Read Carefully:

Information in this document is provided solely in connection with ST products. STMicroelectronics NV and its subsidiaries (“ST”) reserve the right to make changes, corrections, modifications or improvements, to this document, and the products and services described herein at any time, without notice.

All ST products are sold pursuant to ST’s terms and conditions of sale.

Purchasers are solely responsible for the choice, selection and use of the ST products and services described herein, and ST assumes no liability whatsoever relating to the choice, selection or use of the ST products and services described herein.

No license, express or implied, by estoppel or otherwise, to any intellectual property rights is granted under this document. If any part of this document refers to any third party products or services it shall not be deemed a license grant by ST for the use of such third party products or services, or any intellectual property contained therein or considered as a warranty covering the use in any manner whatsoever of such third party products or services or any intellectual property contained therein.

UNLESS OTHERWISE SET FORTH IN ST’S TERMS AND CONDITIONS OF SALE ST DISCLAIMS ANY EXPRESS OR IMPLIED WARRANTY WITH RESPECT TO THE USE AND/OR SALE OF ST PRODUCTS INCLUDING WITHOUT LIMITATION IMPLIED WARRANTIES OF MERCHANTABILITY, FITNESS FOR A PARTICULAR PURPOSE (AND THEIR EQUIVALENTS UNDER THE LAWS OF ANY JURISDICTION), OR INFRINGEMENT OF ANY PATENT, COPYRIGHT OR OTHER INTELLECTUAL PROPERTY RIGHT.

UNLESS EXPRESSLY APPROVED IN WRITING BY TWO AUTHORIZED ST REPRESENTATIVES, ST PRODUCTS ARE NOT RECOMMENDED, AUTHORIZED OR WARRANTED FOR USE IN MILITARY, AIR CRAFT, SPACE, LIFE SAVING, OR LIFE SUSTAINING APPLICATIONS, NOR IN PRODUCTS OR SYSTEMS WHERE FAILURE OR MALFUNCTION MAY RESULT IN PERSONAL INJURY, DEATH, OR SEVERE PROPERTY OR ENVIRONMENTAL DAMAGE. ST PRODUCTS WHICH ARE NOT SPECIFIED AS "AUTOMOTIVE GRADE" MAY ONLY BE USED IN AUTOMOTIVE APPLICATIONS AT USER’S OWN RISK.

Resale of ST products with provisions different from the statements and/or technical features set forth in this document shall immediately void any warranty granted by ST for the ST product or service described herein and shall not create or extend in any manner whatsoever, any liability of ST.

ST and the ST logo are trademarks or registered trademarks of ST in various countries.

Information in this document supersedes and replaces all information previously supplied.

The ST logo is a registered trademark of STMicroelectronics. All other names are the property of their respective owners.

© 2012 STMicroelectronics - All rights reserved

STMicroelectronics group of companies

Australia - Belgium - Brazil - Canada - China - Czech Republic - Finland - France - Germany - Hong Kong - India - Israel - Italy - Japan - Malaysia - Malta - Morocco - Philippines - Singapore - Spain - Sweden - Switzerland - United Kingdom - United States of America

www.st.com