International
IOR Rectifier

AUTOMOTIVE GRADE

AUIRLR2703

- Advanced Planar Technology
- Logic-Level Gate Drive
- Low On-Resistance
- Dynamic dV/dT Rating
- 175°C Operating Temperature
- Fast Switching
- Fully Avalanche Rated
- Repetitive Avalanche Allowed up to Tjmax
- Lead-Free, RoHS Compliant
- Automotive Qualified*

HEXFET® Power MOSFET

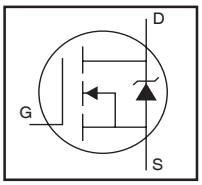

$V_{(BR)DSS}$	30V
$R_{DS(on)}$ max.	45mΩ
$I_{D\ (Silicon\ Limited)}$	23A
$I_{D\ (Package\ Limited)}$	20A

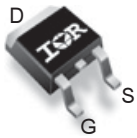

D-Pak
AUIRLR2703

G	D	S
Gate	Drain	Source

Description

Specifically designed for Automotive applications, this cellular design of HEXFET® Power MOSFETs utilizes the latest processing techniques to achieve low on-resistance per silicon area. This benefit combined with the fast switching speed and ruggedized device design that HEXFET power MOSFETs are well known for, provides the designer with an extremely efficient and reliable device for use in Automotive and a wide variety of other applications.

Absolute Maximum Ratings

Stresses beyond those listed under "Absolute Maximum Ratings" may cause permanent damage to the device. These are stress ratings only; and functional operation of the device at these or any other condition beyond those indicated in the specifications is not implied. Exposure to absolute-maximum-rated conditions for extended periods may affect device reliability. The thermal resistance and power dissipation ratings are measured under board mounted and still air conditions. Ambient temperature (T_A) is 25°C, unless otherwise specified.

	Parameter	Max.	Units
I_D @ T_C = 25°C	Continuous Drain Current, V_{GS} @ 10V (Silicon Limited)	23	A
I_D @ T_C = 100°C	Continuous Drain Current, V_{GS} @ 10V	16	
I_D @ T_C = 25°C	Continuous Drain Current, V_{GS} @ 10V (Package Limited)	20	
I_{DM}	Pulsed Drain Current ①	96	
P_D @T_C = 25°C	Power Dissipation	45	W
	Linear Derating Factor	0.30	W/°C
V_{GS}	Gate-to-Source Voltage	± 16	V
E_{AS}	Single Pulse Avalanche Energy (Thermally Limited)②	77	mJ
E_{AS} (tested)	Single Pulse Avalanche Energy Tested Value ⑥	200	
I_{AR}	Avalanche Current ①	14	A
E_{AR}	Repetitive Avalanche Energy ①	4.5	mJ
dv/dt	Peak Diode Recovery ③	5.0	V/ns
T_J T_{STG}	Operating Junction and Storage Temperature Range	-55 to + 175	°C
	Soldering Temperature, for 10 seconds (1.6mm from case)	300	

Thermal Resistance

	Parameter	Typ.	Max.	Units
$R_{\theta JC}$	Junction-to-Case ⑧	——	3.3	°C/W
$R_{\theta JA}$	Junction-to-Ambient (PCB mount) ⑦	——	50	
$R_{\theta JA}$	Junction-to-Ambient	——	110	

HEXFET® is a registered trademark of International Rectifier.
*Qualification standards can be found at http://www.irf.com/

01/11/2011

Static Electrical Characteristics @ T_J = 25°C (unless otherwise specified)

	Parameter	Min.	Typ.	Max.	Units	Conditions
$V_{(BR)DSS}$	Drain-to-Source Breakdown Voltage	30	—	—	V	V_{GS} = 0V, I_D = 250μA
$\Delta V_{(BR)DSS}/\Delta T_J$	Breakdown Voltage Temp. Coefficient	—	0.030	—	V/°C	Reference to 25°C, I_D = 1mA
$R_{DS(on)}$	Static Drain-to-Source On-Resistance	—	—	0.045	Ω	V_{GS} = 10V, I_D = 14A ④
		—	—	0.065		V_{GS} = 4.5V, I_D = 12A ④
$V_{GS(th)}$	Gate Threshold Voltage	1.0	—	—	V	V_{DS} = V_{GS}, I_D = 250μA
gfs	Forward Transconductance	6.4	—	—	S	V_{DS} = 25V, I_D = 14A ⑦
I_{DSS}	Drain-to-Source Leakage Current	—	—	25	μA	V_{DS} = 30V, V_{GS} = 0V
		—	—	250		V_{DS} = 24V, V_{GS} = 0V, T_J = 150°C
I_{GSS}	Gate-to-Source Forward Leakage	—	—	100	nA	V_{GS} = 16V
	Gate-to-Source Reverse Leakage	—	—	-100		V_{GS} = -16V

Dynamic Electrical Characteristics @ T_J = 25°C (unless otherwise specified)

	Parameter	Min.	Typ.	Max.	Units	Conditions
Q_g	Total Gate Charge	—	—	15	nC	I_D = 14A
Q_{gs}	Gate-to-Source Charge	—	—	4.6		V_{DS} = 24V
Q_{gd}	Gate-to-Drain ("Miller") Charge	—	—	9.3		V_{GS} = 4.5V ④⑦
$t_{d(on)}$	Turn-On Delay Time	—	8.5	—	ns	V_{DD} = 15V
t_r	Rise Time	—	140	—		I_D = 14A
$t_{d(off)}$	Turn-Off Delay Time	—	12	—		R_G = 12Ω
t_f	Fall Time	—	20	—		V_{GS} = 4.5V, R_D = 1.1Ω ④⑦
L_D	Internal Drain Inductance	—	4.5	—	nH	Between lead, 6mm (0.25in.) from package and center of die contact ⑤
L_S	Internal Source Inductance	—	7.5	—		
C_{iss}	Input Capacitance	—	450	—	pF	V_{GS} = 0V
C_{oss}	Output Capacitance	—	210	—		V_{DS} = 25V
C_{rss}	Reverse Transfer Capacitance	—	110	—		f = 1.0MHz ⑦

Diode Characteristics

	Parameter	Min.	Typ.	Max.	Units	Conditions
I_S	Continuous Source Current (Body Diode)	—	—	23⑤	A	MOSFET symbol showing the integral reverse p-n junction diode.
I_{SM}	Pulsed Source Current (Body Diode) ①	—	—	96		
V_{SD}	Diode Forward Voltage	—	—	1.3	V	T_J = 25°C, I_S = 14A, V_{GS} = 0V ④
t_{rr}	Reverse Recovery Time	—	65	97	ns	T_J = 25°C, I_F = 14A
Q_{rr}	Reverse Recovery Charge	—	140	210	nC	di/dt = 100A/μs ④⑦
t_{on}	Forward Turn-On Time	Intrinsic turn-on time is negligible (turn-on is dominated by L_S+L_D)				

Notes:

① Repetitive rating; pulse width limited by max. junction temperature. (See fig. 11)

② V_{DD} = 15V, starting T_J = 25°C, L =570μH R_G = 25Ω, I_{AS} = 14A. (See Figure 12)

③ $I_{SD} \leq$ 14A, di/dt $\leq$ 140A/μs, $V_{DD} \leq V_{(BR)DSS}$, $T_J \leq$ 175°C.

④ Pulse width $\leq$ 300μs; duty cycle $\leq$ 2%.

⑤ Caculated continuous current based on maximum allowable junction temperature. Package limitation current = 20A.

⑥ This is applied for I-PAK, L_S of D-PAK is measured between lead and center of die contact.

⑦ Uses IRL2703 data and test conditions.

Qualification Information†

Qualification Level		Automotive (per AEC-Q101) ††	
		Comments: This part number(s) passed Automotive qualification. IR's Industrial and Consumer qualification level is granted by extension of the higher Automotive level.	
Moisture Sensitivity Level		D-PAK	MSL1
ESD	Machine Model	Class M2 (+/- 150V)††† AEC-Q101-002	
	Human Body Model	Class H1A (+/- 500V)††† AEC-Q101-001	
	Charged Device Model	Class C5 (+/- 2000V)††† AEC-Q101-005	
RoHS Compliant		Yes	

† Qualification standards can be found at International Rectifier's web site: http//www.irf.com/

†† Exceptions to AEC-Q101 requirements are noted in the qualification report.

††† Highest passing voltage

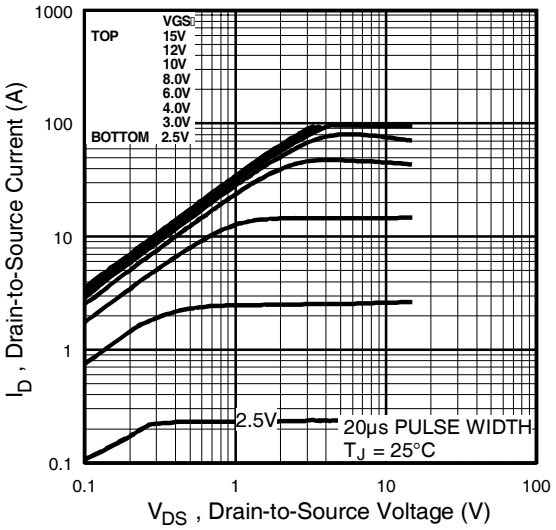

Fig 1. Typical Output Characteristics

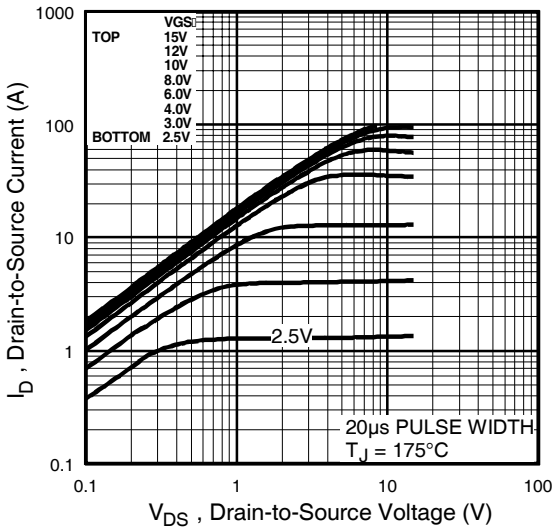

Fig 2. Typical Output Characteristics

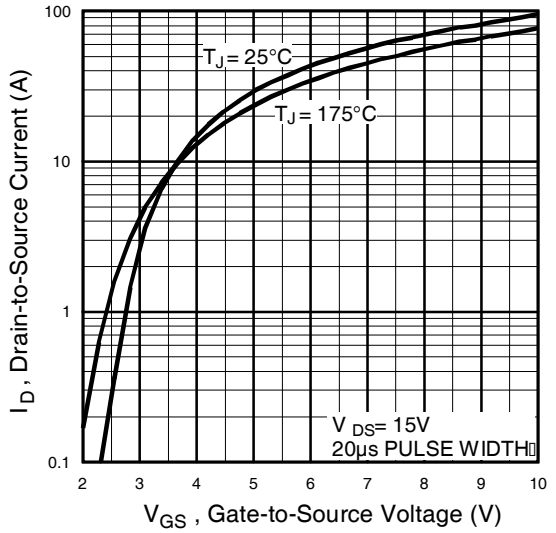

Fig 3. Typical Transfer Characteristics

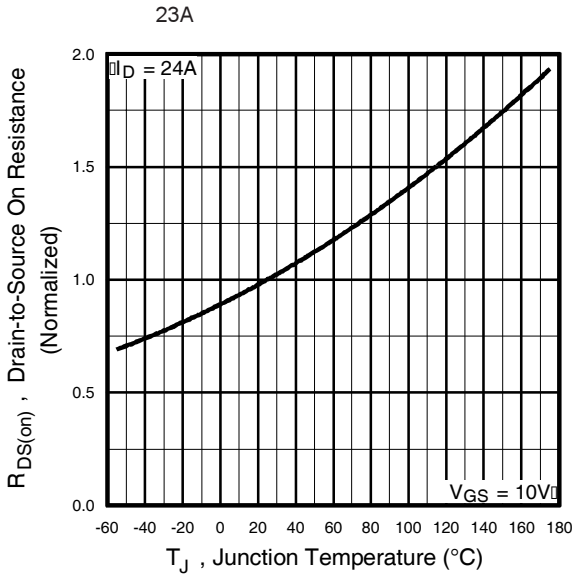

Fig 4. Normalized On-Resistance Vs. Temperature

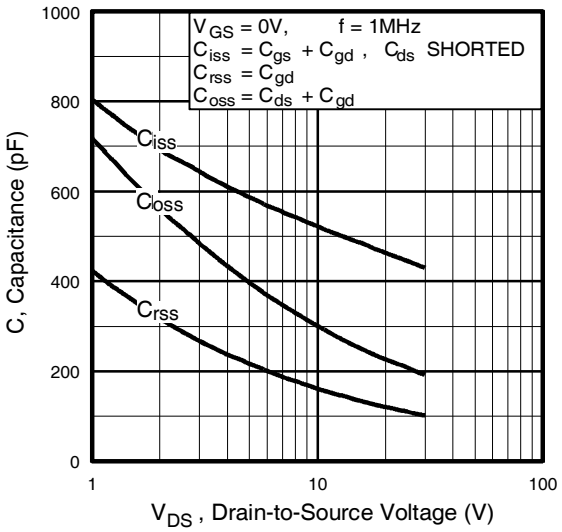

Fig 5. Typical Capacitance Vs. Drain-to-Source Voltage

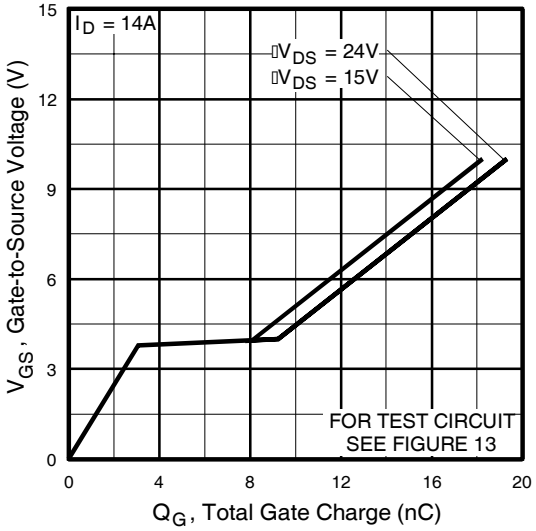

Fig 6. Typical Gate Charge Vs. Gate-to-Source Voltage

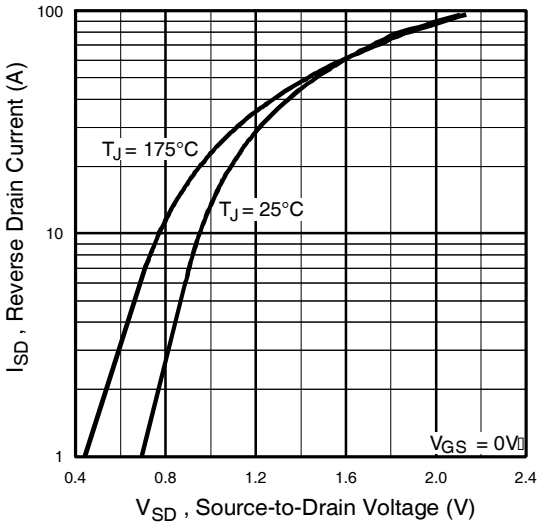

Fig 7. Typical Source-Drain Diode Forward Voltage

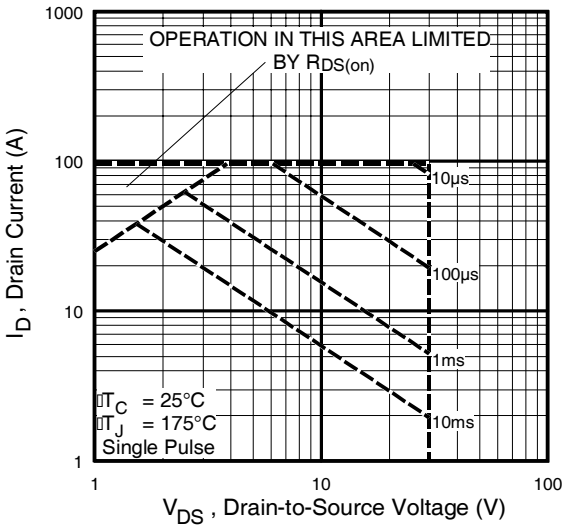

Fig 8. Maximum Safe Operating Area

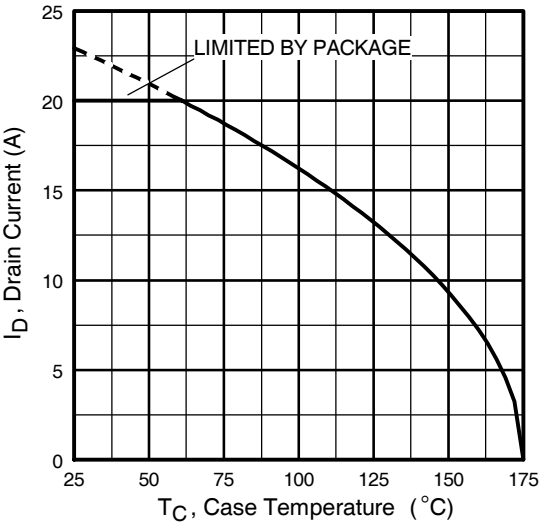

Fig 9. Maximum Drain Current Vs. Case Temperature

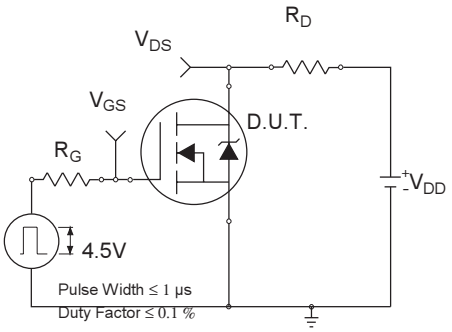

Fig 10a. Switching Time Test Circuit

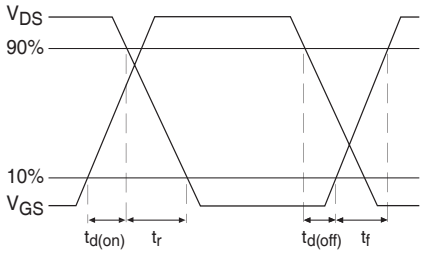

Fig 10b. Switching Time Waveforms

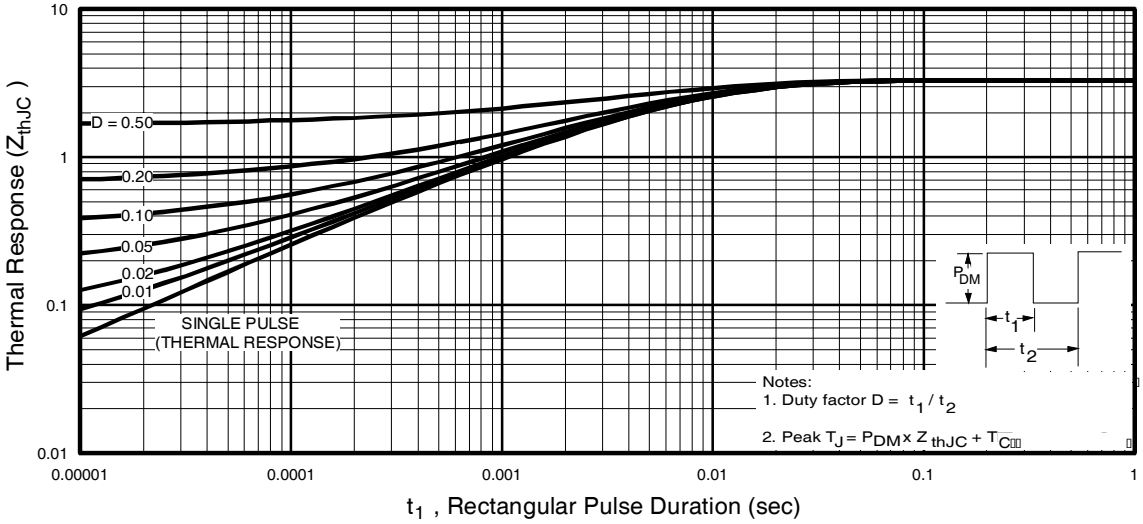

Fig 11. Maximum Effective Transient Thermal Impedance, Junction-to-Case

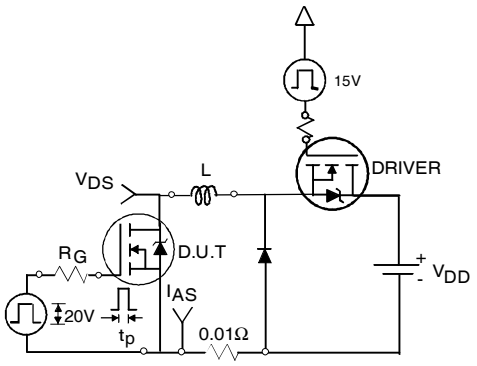

Fig 12a. Unclamped Inductive Test Circuit

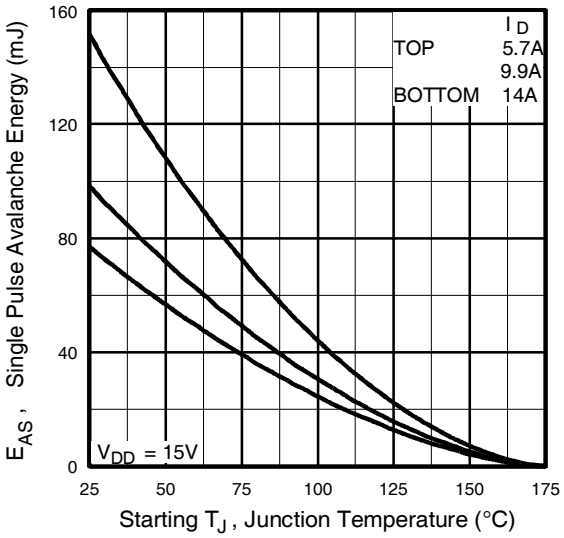

Fig 12c. Maximum Avalanche Energy Vs. Drain Current

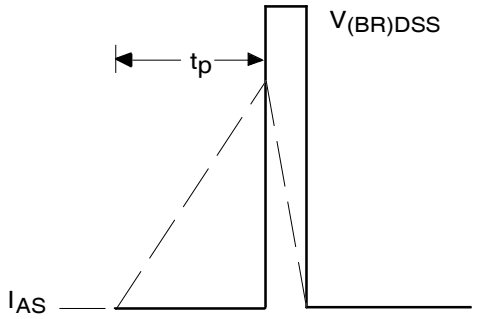

Fig 12b. Unclamped Inductive Waveforms

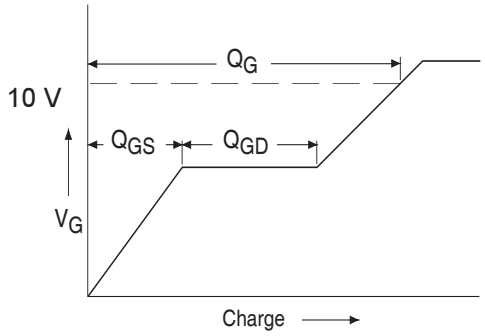

Fig 13a. Basic Gate Charge Waveform

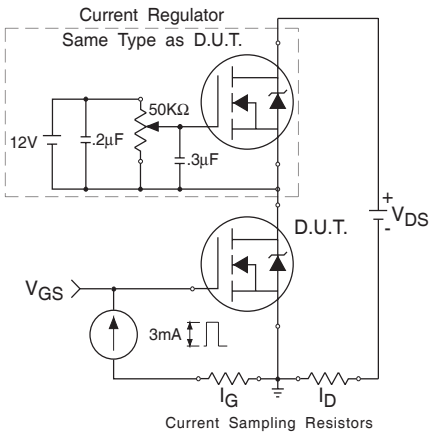

Fig 13b. Gate Charge Test Circuit

Peak Diode Recovery dv/dt Test Circuit

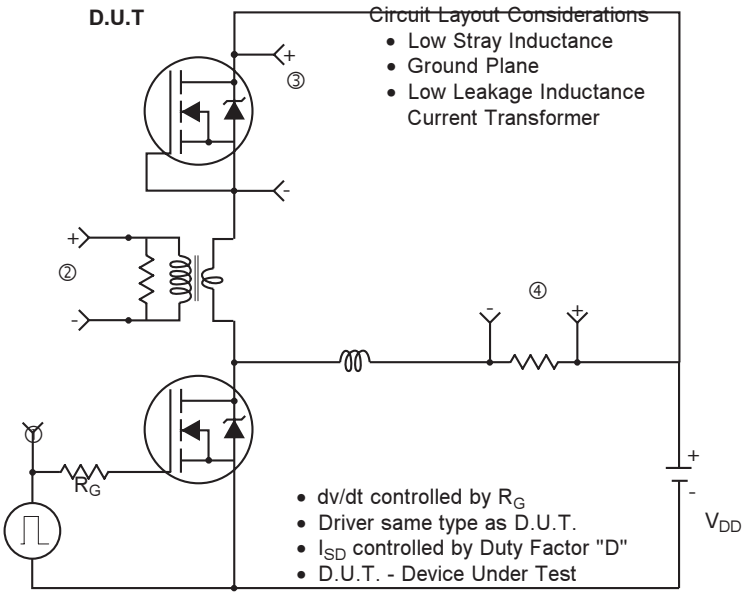

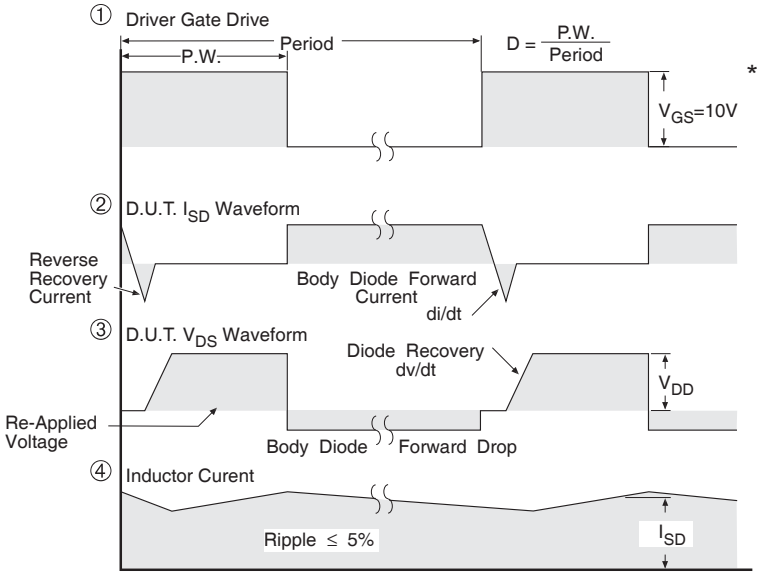

* V_{GS} = 5V for Logic Level Devices

Fig 14. For N-Channel HEXFETS

D-Pak (TO-252AA) Package Outline

Dimensions are shown in millimeters (inches)

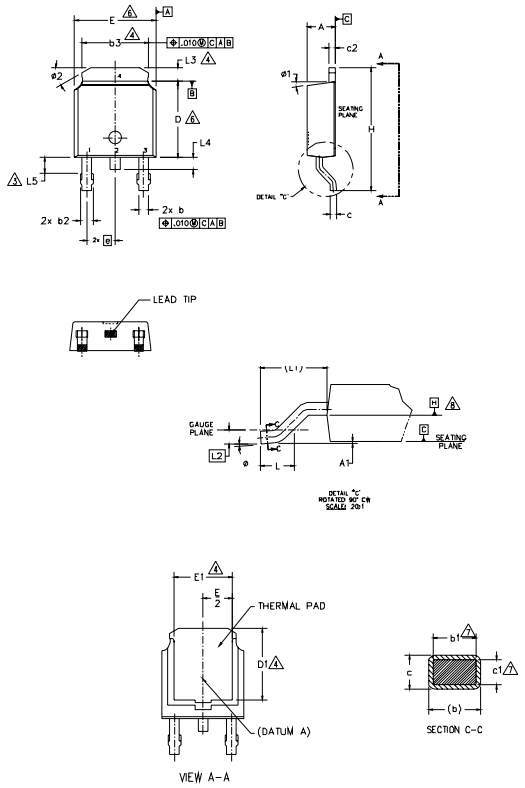

NOTES:

1.- DIMENSIONING AND TOLERANCING PER ASME Y14.5M-1994

2.- DIMENSION ARE SHOWN IN INCHES [MILLIMETERS].

3.- LEAD DIMENSION UNCONTROLLED IN L5.

4.- DIMENSION D1, E1, L3 & b3 ESTABLISH A MINIMUM MOUNTING SURFACE FOR THERMAL PAD.

5.- SECTION C-C DIMENSIONS APPLY TO THE FLAT SECTION OF THE LEAD BETWEEN .005 AND 0.10 [0.13 AND 0.25] FROM THE LEAD TIP.

6.- DIMENSION D & E DO NOT INCLUDE MOLD FLASH. MOLD FLASH SHALL NOT EXCEED .005 [0.13] PER SIDE. THESE DIMENSIONS ARE MEASURED AT THE OUTMOST EXTREMES OF THE PLASTIC BODY.

7.- DIMENSION b1 & c1 APPLIED TO BASE METAL ONLY.

8.- DATUM A & B TO BE DETERMINED AT DATUM PLANE H.

9.- OUTLINE CONFORMS TO JEDEC OUTLINE TO-252AA.

SYMBOL	DIMENSIONS				NOTES
	MILLIMETERS		INCHES		
	MIN.	MAX.	MIN.	MAX.	
A	2.18	2.39	.086	.094	
A1	–	0.13	–	.005	
b	0.64	0.89	.025	.035	
b1	0.65	0.79	.025	.031	7
b2	0.76	1.14	.030	.045	
b3	4.95	5.46	.195	.215	4
c	0.46	0.61	.018	.024	
c1	0.41	0.56	.016	.022	7
c2	0.46	0.89	.018	.035	
D	5.97	6.22	.235	.245	6
D1	5.21	–	.205	–	4
E	6.35	6.73	.250	.265	6
E1	4.32	–	.170	–	4
e	2.29 BSC		.090 BSC		
H	9.40	10.41	.370	.410	
L	1.40	1.78	.055	.070	
L1	2.74 BSC		.108 REF.		
L2	0.51 BSC		.020 BSC		
L3	0.89	1.27	.035	.050	4
L4	–	1.02	–	.040	
L5	1.14	1.52	.045	.060	3
ø	0°	10°	0°	10°	
ø1	0°	15°	0°	15°	
ø2	25°	35°	25°	35°	

LEAD ASSIGNMENTS

HEXFET

1.- GATE
2.- DRAIN
3.- SOURCE
4.- DRAIN

IGBT & CoPAK

1.- GATE
2.- COLLECTOR
3.- EMITTER
4.- COLLECTOR

D-Pak Part Marking Information

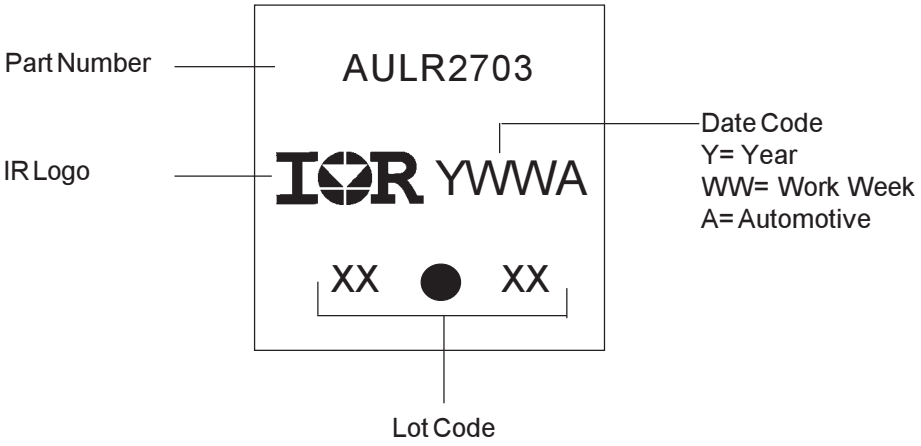

Note: For the most current drawing please refer to IR website at http://www.irf.com/package/

D-Pak (TO-252AA) Tape & Reel Information

Dimensions are shown in millimeters (inches)

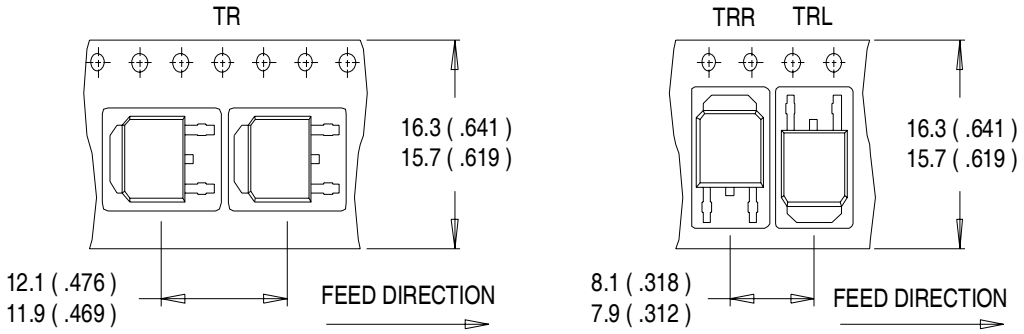

NOTES :
1. CONTROLLING DIMENSION : MILLIMETER.
2. ALL DIMENSIONS ARE SHOWN IN MILLIMETERS (INCHES).
3. OUTLINE CONFORMS TO EIA-481 & EIA-541.

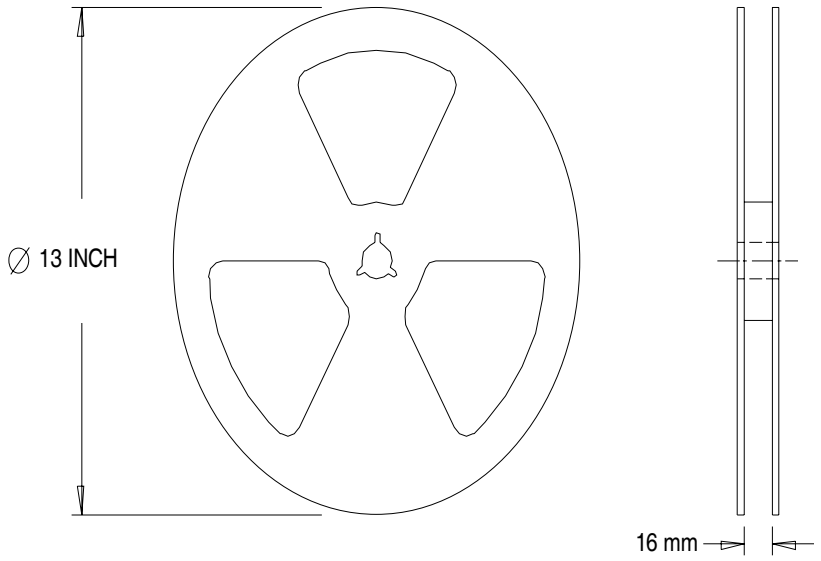

NOTES :
1. OUTLINE CONFORMS TO EIA-481.

Note: For the most current drawing please refer to IR website at http://www.irf.com/package/

Ordering Information

Base part number	Package Type	Standard Pack		Complete Part Number
		Form	Quantity	
AUIRLR2703	Dpak	Tube	75	AUIRLR2703
		Tape and Reel	2000	AUIRLR2703TR
		Tape and Reel Left	3000	AUIRLR2703TRL
		Tape and Reel Right	3000	AUIRLR2703TRR

IMPORTANT NOTICE

Unless specifically designated for the automotive market, International Rectifier Corporation and its subsidiaries (IR) reserve the right to make corrections, modifications, enhancements, improvements, and other changes to its products and services at any time and to discontinue any product or services without notice. Part numbers designated with the "AU" prefix follow automotive industry and / or customer specific requirements with regards to product discontinuance and process change notification. All products are sold subject to IR's terms and conditions of sale supplied at the time of order acknowledgment.

IR warrants performance of its hardware products to the specifications applicable at the time of sale in accordance with IR's standard warranty. Testing and other quality control techniques are used to the extent IR deems necessary to support this warranty. Except where mandated by government requirements, testing of all parameters of each product is not necessarily performed.

IR assumes no liability for applications assistance or customer product design. Customers are responsible for their products and applications using IR components. To minimize the risks with customer products and applications, customers should provide adequate design and operating safeguards.

Reproduction of IR information in IR data books or data sheets is permissible only if reproduction is without alteration and is accompanied by all associated warranties, conditions, limitations, and notices. Reproduction of this information with alterations is an unfair and deceptive business practice. IR is not responsible or liable for such altered documentation. Information of third parties may be subject to additional restrictions.

Resale of IR products or serviced with statements different from or beyond the parameters stated by IR for that product or service voids all express and any implied warranties for the associated IR product or service and is an unfair and deceptive business practice. IR is not responsible or liable for any such statements.

IR products are not designed, intended, or authorized for use as components in systems intended for surgical implant into the body, or in other applications intended to support or sustain life, or in any other application in which the failure of the IR product could create a situation where personal injury or death may occur. Should Buyer purchase or use IR products for any such unintended or unauthorized application, Buyer shall indemnify and hold International Rectifier and its officers, employees, subsidiaries, affiliates, and distributors harmless against all claims, costs, damages, and expenses, and reasonable attorney fees arising out of, directly or indirectly, any claim of personal injury or death associated with such unintended or unauthorized use, even if such claim alleges that IR was negligent regarding the design or manufacture of the product.

IR products are neither designed nor intended for use in military/aerospace applications or environments unless the IR products are specifically designated by IR as military-grade or "enhanced plastic." Only products designated by IR as military-grade meet military specifications. Buyers acknowledge and agree that any such use of IR products which IR has not designated as military-grade is solely at the Buyer's risk, and that they are solely responsible for compliance with all legal and regulatory requirements in connection with such use.

IR products are neither designed nor intended for use in automotive applications or environments unless the specific IR products are designated by IR as compliant with ISO/TS 16949 requirements and bear a part number including the designation "AU". Buyers acknowledge and agree that, if they use any non-designated products in automotive applications, IR will not be responsible for any failure to meet such requirements.

For technical support, please contact IR's Technical Assistance Center

http://www.irf.com/technical-info/

WORLD HEADQUARTERS:

233 Kansas St., El Segundo, California 90245

Tel: (310) 252-7105